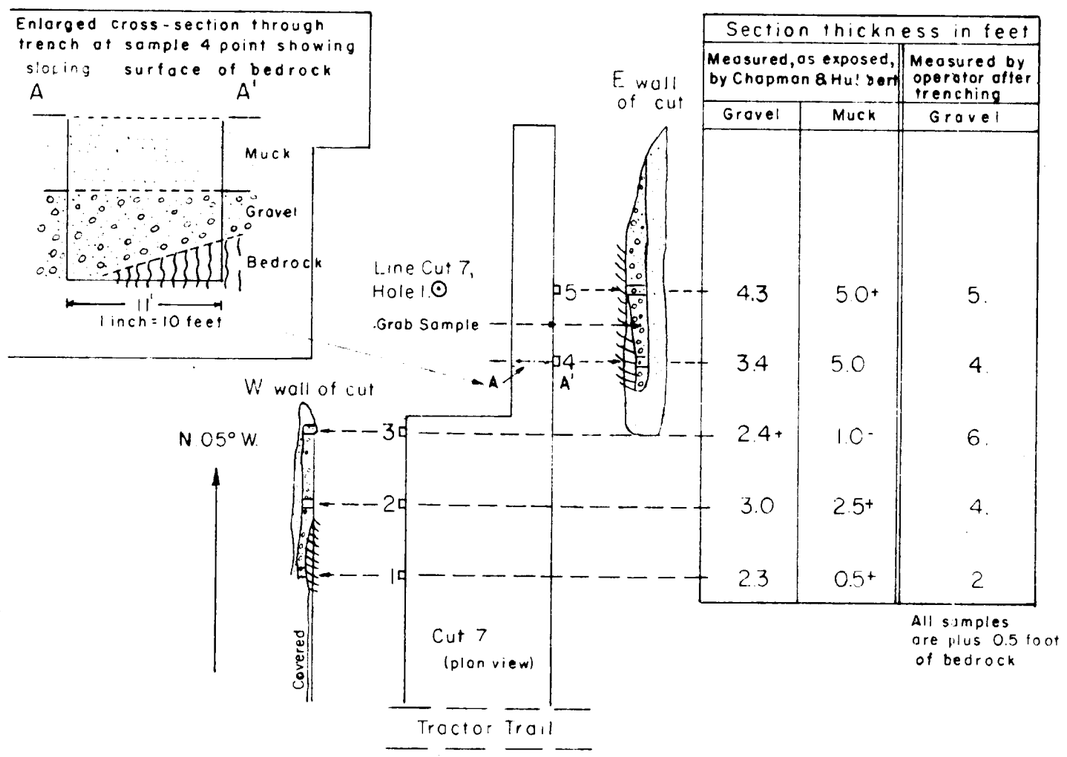

Section thickness in feet		
Measured, as exposed, by Chapman & Hulbert		Measured by operator after trenching
Gravel	Muck	Gravel
4.3	5.0+	5.
3.4	5.0	4.
2.4+	1.0-	6.
3.0	2.5+	4.
2.3	0.5+	2

All samples are plus 0.5 foot of bedrock

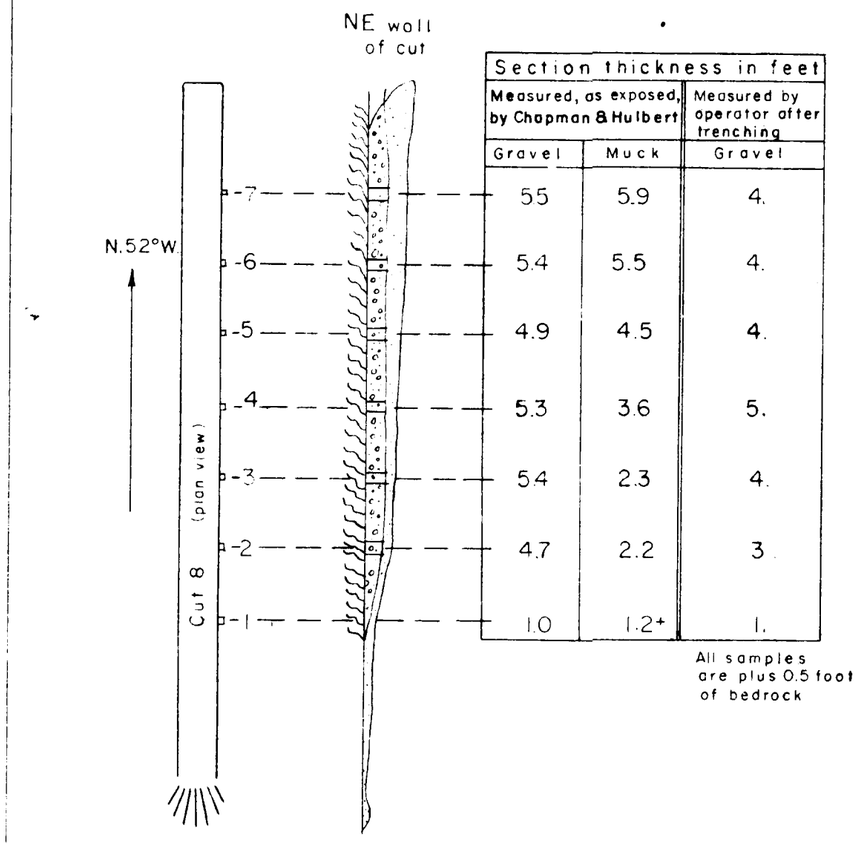

Section thickness in feet		
Measured, as exposed, by Chapman & Hulbert		Measured by operator after trenching
Gravel	Muck	Gravel
5.5	5.9	4.
5.4	5.5	4.
4.9	4.5	4.
5.3	3.6	5.
5.4	2.3	4.
4.7	2.2	3
1.0	1.2+	1.

All samples are plus 0.5 foot of bedrock

EXPLANATION

Muck

Gravel

Bedrock

2- Sample site and number

Geology by Robert M. Chapman, U.S. Geological Survey, and J.H Hulbert, U.S. Bureau Mines, Sept. 1952.

FIGURE 6. - MAP OF CUTS 7 AND 8, TOZIMORAN CREEK, SHOWING SAMPLE LOCATIONS AND GEOLOGY

40 0 40 80 FEET

This map is preliminary and has not been edited or reviewed for conformity with U.S. Geological Survey standards

GEOPHYSICAL INSTITUTE LIBRARY
UNIVERSITY OF ALASKA, FAIRBANKS
REPORT
QE
75
065
no. 63-15