# STRONG GROUND MOTIONS IN TWO SEISMIC GAPS: SHUMAGIN ISLANDS, ALASKA AND NORTHERN LESSER ANTILLES, CARIBBEAN

Klaus H. Jacob and William R. McCann

Lamont-Doherty Geological Observatory of Columbia University
Palisades, New York 10964

USGS CONTRACT NO. 14-08-0001-19130
Supported by the EARTHQUAKE HAZARDS REDUCTION PROGRAM

OPEN-FILE NO. 82-139

U.S. Geological Survey
OPEN FILE REPORT

This report was prepared under contract to the U.S. Geological Survey and has not been reviewed for conformity with USGS editorial standards and stratigraphic nomenclature. Opinions and conclusions expressed herein do not necessarily represent those of the USGS. Any use of trade names is for descriptive purposes only and does not imply endorsement by the USGS.

# INTRODUCTION

A total of 15 strong motion instruments have been installed in two subduction zone seismic gaps which are estimated to have high probabilities to rupture in great earthquakes in the not too distant future. The two gaps are in the Shumagin Islands segment of the eastern Aleutian arc, Alaska, and the Northern Lesser Antilles, Caribbean. Where possible the strong motion sites are located at remote, telemetered seismic network sites. In many instances a trigger signal from the strong motion accelerometers is telemetered through the seismic network communication lines to the central recording site for accurate timing of the recording of any strong motion events. As the Caribbean network only has digital recording facilities and the Shumagin Islands network is presently being changed from continuous analog to digital event recording, technical modifications of the analog version of the trigger recording system is required to guarantee dependable identification of instrument and accurate trigger moment resolution at the central recording site. In addition the new system will provide that an approximate time of event will be recorded in conventional form on each SMA record to prevent non-identification of records in case of non-operative telemetry links or malfunction at the central recording sites.

## The Shumagin Gap Strong Motion Program

Sykes et al. (1980) documented the historic record of large and great earthquakes in the Alaska-Aleutian arc. They find that recurrence times for great earthquakes in this arc are of the order of 100 years or less. Davies et al. (1981) made a special study of the Shumagin seismic gap and estimate that the recurrence times of great earthquakes for this arc segment vary between 50 and 90 years. At least 77 years have elapsed since the last great earthquake ruptured the Shuamgin seismic gap. Hence, there is a high probability for a great earthquake to occur in this gap within the next 1 or 2 decades. The inferred long-term imminence of a great earthquake in the Shumagin seismic gap, the fact that strong ground motions associated with a truly great earthquake never have been monitored instrumentally anywhere on earth, and the need for evaluating seismic hazards in the Alaska continental shelf for oil exploration purposes provide the rationale for our attempt to improve the strong motion monitoring capability in this region.

Figure 1 shows the newly attained state of the L-DGO operated strong-motion accelerograph sites in the Shumagin Islands, Alaska. A total of ten sites are now operative(Table 1), of which six were newly installed in 1980 (see Appendix I). During 1981 the total number may increase to 13 sites. All sites are equipped with Kinemetrics SMA-1 instruments. Of these the trigger signals at SNK, DLG, NGI, CNB, and BKJ are

Table 1. L-DGO SMA-Sites, Alaska; Status 1980

(Short List)

| STATION | REMOVED | | | INSTALLED OR SERVICED | | | TRIGGER SIGNAL |
|---|---|---|---|---|---|---|---|
| | Date | Ser. No. | Type | Date | Ser. No. | Type | (yes/no) |
| SAN, Sand Point | 7/28/80 | 202 | 1g | 7/29/80 | 954 | ½g | No |
| BKJ, Big Koniuji | | | | 8/08/80 | 202 | 1g | Yes |
| NGI, Nagai | | | | 7/26/80 | 327 | 1g | Yes |
| SIM, Simeonof | 6/13/80 | 2678 | 1g | 6/13/80 | 2038 | 1g | No |
| SGB, San Diego Bay | | | | 8/08/80 | 2677(*) | 1g | No |
| CNB, Chernabura | | | | 7/26/80 | 4156 | 1g | Yes |
| SNK, Sanak | | | | 7/20/80 | 4155 | 1g | Yes |
| DLG, Dolgoi | | | | 7/20/80 | 4153 | 1g | Yes |
| DUT, Dutch Harbor | 3/07/80 | 2677 | 1g | ?/07/80 | 4154 | 1g | No |
| CDB, Cold Bay (USGS installation, L-DGO-serviced) | | | | 10/8/80 | 1930 | 1g | No |

Note: Underlined serial number indicates refurbished unit, double underlined indicates newly acquired unit. All others are pre-existing units.

(*): Trigger assembly replaced with new unit.

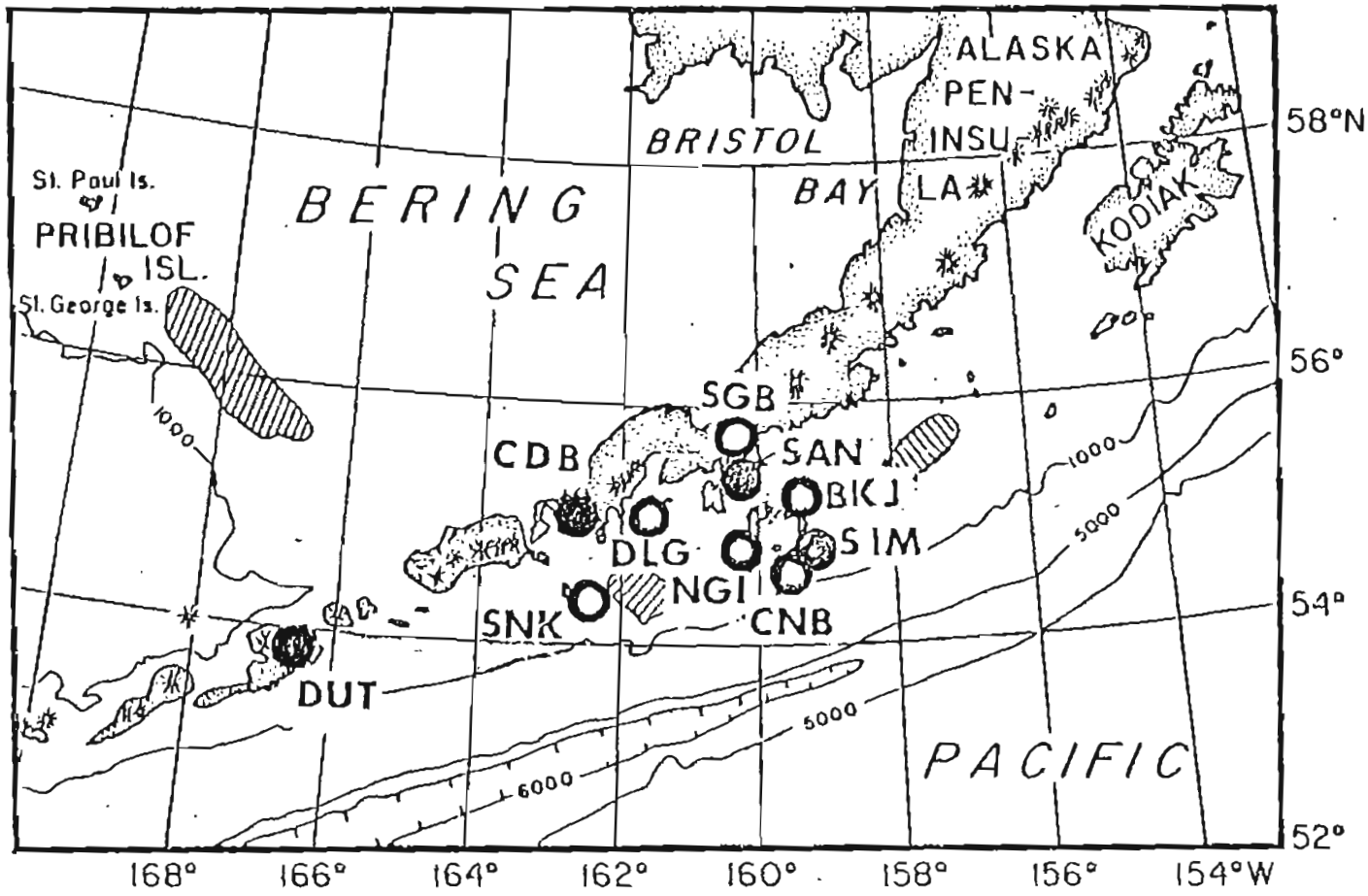


Figure 1. Location of Lamont-operated strong-motion instruments in the eastern Aleutian arc and Shumagin seismic gap region. Open circles represent new sites whose instruments were installed in 1980. Solid circles represents pre-existing strong motion sites. Remote trigger signals from SNK, DLG, NGI, CNB, and BKJ are centrally monitored and recorded at Sand Point (SAN).

interfaced with the radio telemetry links of the Shumagin seismic network. This interfacing was designed for analog central recording of a 409.6 Hz tone during SMA operation, and allows the transmission of the exact SMA-trigger moment at the sites to the central recording site at Sand Point (SAN). The analog recording of the FM-trigger tone has certain disadvantages, however, and is not suitable for a digital, central event recording mode. Therefore a redesign of this system has been undertaken which is briefly outlined in Appendix III. Appendix I provides a complete listing of station characteristics of all strong-motion sites in the eastern Aleutian/Shumagin Islands region as presently operated and maintained by Lamont-Doherty Geological Observatory.

Shortly after installation of the new SMA sites in August 1980, a magnitude 5.8 earthquake occurred in the proximity of Nagai Island (NGI). Recordings from the trigger monitor at the central recording site (SAN) indicate that this event triggered accelerographs at four sites: NGI, CN8, DLG, and BKJ. It may have also triggered SIM which is not interfaced with the seismic network. Verification of the triggers and retrieval of strong motion records must wait until the summer field-season of 1981 when all remote stations will be routinely serviced with helicopter support from NOAA.

## Strong Motion Program for Caribbean Seismic Gaps

Recent studies of the northeast Caribbean have clarified our understanding of the tetonics and seismic potential of this seismic zone (McCann and Sykes, 1981). The estimates of seismic potential were derived from 1) historic earthquakes with magnitudes larger than 7.5; 2) moderate sized shocks of the last 30 years; 3) microearthquakes recorded since 1976; and 4) tectonic structures inferred from marine geophysical data. The map of seismic potential (Figure 2) describes the extent of active seismic regions and the expected magnitudes of shocks in that region and provides the rationale for the siting of strong motion instruments.

The seismic gaps in the northeastern Caribbean (McCann et al., 1979) are now instrumented with a total of 5 accelerographs installed by Lamont-Doherty. The locations of the existing SMA-stations are shown in Figure 3. For detailed station information see Appendix II. A short listing is given in Table 2. All SMA sites are scheduled for interfacing with the L-DGO Caribbean seismic network for transmission of trigger times. For layout of this interfacing see Appendix III.

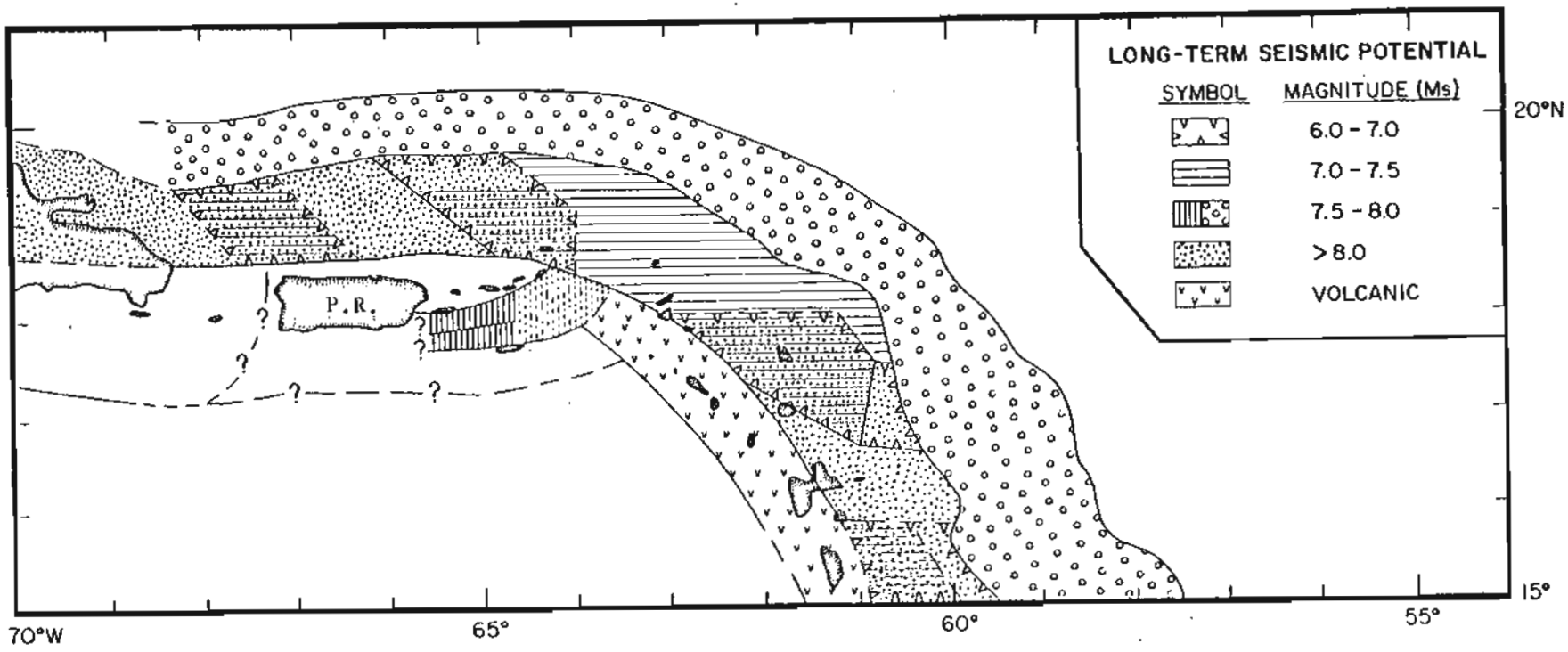


Figure 2. Estimate of long-term seismic potential for the seismic zone in the northeast Caribbean. Patterns delimit regions likely to experience earthquakes of a given magnitude. Those enclosed by barbs and covered by line and dot patterns (e.g. northwest of Puerto Rico - P.R.) are likely to be active for shocks with magnitude 6.0 and larger, whereas region with only stipple pattern (e.g. north of eastern Puerto Rico) will tend to be quiescent except for occasional great earthquakes.

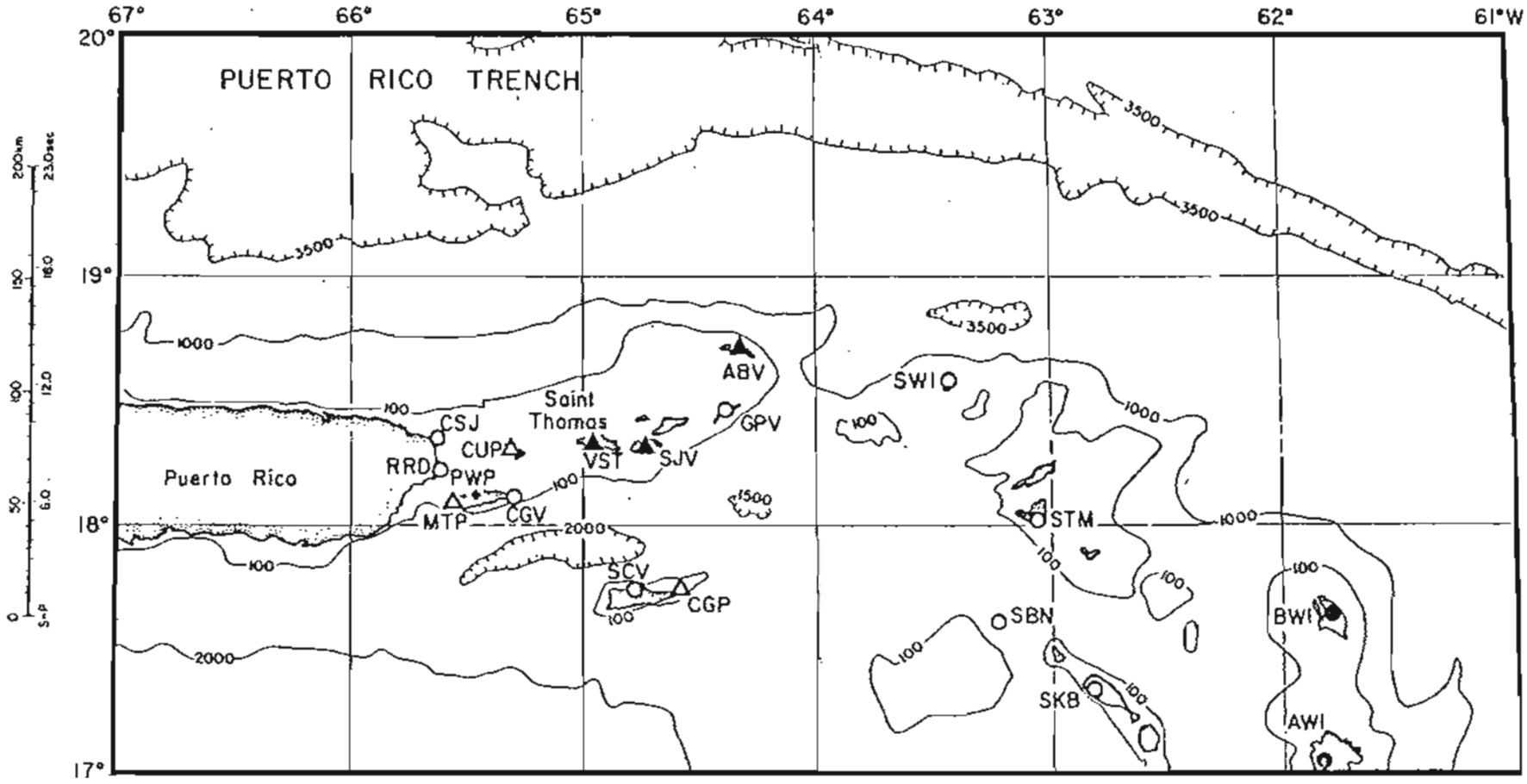


Figure 3. Present configuration of the Northeastern Caribbean seismic network including sites of strong-motion instruments. SMA's were installed in 1980 at AWI and BWI; proposed sites are SKB and STM. Installation is planned for late in 1981. Signals are telemetered to St. Thomas (VST) where they are recorded on a digital recording system; SMA trigger times will also be recorded on this system when the interface system described in Appendix III is installed. Symbols are as follows: circles - single component stations; triangles - three component stations; cross - inactive stations; solid symbols - SMA site.

Table 2. L-DGO SMA-Sites, Caribbean; Status 1981

(Short List)

| STATION | REMOVED | | | INSTALLED OR SERVICED | | | TRIGGER SIGNAL |
|---|---|---|---|---|---|---|---|
| | Date | Ser. No. | Type | Date | Ser. No. | Type | (yes/no) |
| VST, St. Thomas | | | | 3/??/78 | 1064 | ½g | No |
| SJV, St. John | | | | 3/22/78 | 3170 | ½g | No |
| ABV, Anegada | | | | 3/20/78 | 3176 | ½g | No |
| AWI, Antigua | | | | | 961 | ½g | No |
| BWI, Barbuda | | | | | 966 | ½g | No |
| STM, Sain Maarten | | | | (10/81) | ? | ½g | No |
| SKB, Saint Christopher | | | | (10/81) | ? | ½g | No |

Note: Dates in parentheses are proposed installation dates. Underlined serial number indicates refurbished unit.

## CONCLUSIONS

A program to establish a strong-motion recording capability in two seismic gaps has been implemented. Installation of a total of 10 stations in the Shumagin seismic gap, eastern Aleutian arc of Alaska, has been completed in 1980. In the seismic gap in the northeastern Caribbean a total of 5 SMA sites are operated since early 1981. The remote strong motion sites coincide in most cases with telemetered seismic network stations. Where possible strong motion instuments are interfaced with the network to transmit exact SMA-trigger times to the central recording site. Modification of the trigger moment data transmission system for central digital event recording is in the planning stage. A magnitude 5.8 event provided a test for the new Shumagin Island strong motion network and central monitoring of SMA operation indicated at least 4 triggered instruments. Data analysis of future SMA records is carried out under separate funding.

## REFERENCES


Davies, J.N., L.R. Sykes, L. House, and K.H. Jacob, Shumagin seismic gap, Alaska Peninsula: History of great earthquakes, tectonic setting, and evidence for high seismic potential, J. Geophys. Res., in press, 1981.

McCann, W.R., S.P. Nishenko, L.R. Sykes, and J. Krause, Seismic gaps and plate teactonics: seismic potential for major boundaries, PAGEOPH, 117, 1082-1147, 1979.

McCann, W., and L. Sykes, Tectonics and seismic potential of the northeast Caribbean, in preparation, 1981.

Sykes, L.R., J.B. Kisslinger, L. House, J. Davies, and K. Jacob, Rupture zones of great earthquakes, Alaska-Aleutian arc, 1784-1980, Science, 210, 1343-1345, 1980.

APPENDIX I

Lamont-Doherty Geological Observatory Strong Motion Sites in Alaska

This file contains information about strong motion instruments operated by Lamont-Doherty Geological Observatory

```
_________________________
_                       _
_   orientation         _
_      ------>          _
_________________________
   1              1
                  1
                  1
```

Shumagin Islands and Unalaska areas in Alaska

stations:

| | |
|---|---|
| Big Koniuji | BKJ |
| Cold Bay | CDB |
| Chernabura | CNB |
| Dolgoi | DLG |
| Dutch Harbor | DUT |
| Nagai | NGI |
| Sand Point | SAN |
| San Diego Bay | SGB |
| Simeonof | SIM |
| Sanak | SNK |

BKS
station: Big Konuiji
coordinates: 55 Ø9.64'N 159 33.92'W
elevation: 773 ft
site: cemented to bedrock at remote sp station
type of instrument: Kinometrics SMA-1 1g unit
date installed: 8/8/8Ø
serial no.: 2Ø2(8/8/8Ø)
orientation: S7ØW
sensitivity: S7ØW 1.75cm/g UP 1.95cm/g S2ØE 1.75cm/g
natural freq.: 26.4 hz 26.3 hz 21.5 hz
damping:
records: none
comments: runs off 12v power supply at sp station
has trigger relay
trigger may be too sensitive
updated: 12/3Ø/8Ø jm

CDB
station: Cold Bay
coordinates: 55 12.6'N 162 42.6'W
elevation:
site: bolted to ground floor of FAA building
building on glacial outwash
type of instrument: Kinemetrics SMA-1 1g unit
date installed: 4/28/76
serial no.: 193Ø (4/28/76)
orientation: N9ØE
sensitivity: N9ØE 1.71cm/g UP 1.77cm/g N36Ø 1.79cm/g
natural freq.: 26.8 hz 26.2 hz 26.2 hz
damping:

records: 12/29/65
7/25/75
records at USGS Menlo Park
comments: USGS Instrument
runs off external battery
no measure of absolute time
need keys for padlocks to service instrument
file updated: 10/26/80 jm

CNB
station: Chernabura
coordinates: 54 49.22'N 159 35.30'W
elevation: 290 ft
site: cemented to bedrock at remote sp station
type of instrument: Kinemetrics SMA-1 1g unit
date installed: 7/26/80
serial no.: 4156 (7/26/80)
orientation: S70W

| | | | |
|---|---|---|---|
| sensitivity: | S70W 1.67cm/g | UP 2.08cm/g | S20E 1.82cm/g |
| natural freq.: | 26.4 hz | 24.3 hz | 26.4 hz |
| damping: | 0.60 | 0.60 | 0.60 |

records: none
comments: runs off 12v power supply at sp station
has trigger relay
no fuse in SMA
file updated: 10/26/80 jm

DLG
station: Dolgoi
coordinates: 55 08.46'N 161 50.14'W
elevation: 1182 ft
site: cemented to jointed bedrock at remote sp site
type of instrument: Kinemetrics SMA-1 1g unit
date installed: 7/20/80
serial no.: 4153 (7/20/80)
orientation: N53E

| | | | |
|---|---|---|---|
| sensitivity: | N53E 1.79cm/g | UP 1.90cm/g | N37W 1.76cm/g |
| natural freq.: | 25.2 hz | 25.7 hz | 26.4 hz |
| damping: | 0.60 | 0.60 | 0.60 |

records: none
comments: runs off 12v power supply at sp station
has trigger relay
but cannot tell trigger from SNK trigger
no fuse in SMA
file updated: 10/26/80 jm

DUT
station: Dutch Harbor
coordinates: 53 53.9'N 166 32.2'W
elevation: 197 ft
site: bolted to cement pier
type of instrument: Kinemetrics SMA-1 1g unit
date installed: 7/77/80
serial no.: 4154 (7/77/80)
orientation: N000

| | | | |
|---|---|---|---|
| sensitivity: | N000 1.85cm/g | UP 1.99 cm/g | N090W 1.78cm/g |
| natural freq.: | 25.4 hz | 25.3 hz | 26.6 hz |
| damping: | 0.60 | 0.60 | 0.60 |

records: none
comments: runs off trickle charger
no measure of absolute time

?? to 3/77/80 #327 was located at old Dutch Harbor station DUT
3/77/80 to 7/77/80 #2677 was located at old Dutch Harbor station DUT
file updated: 10/26/80 jm

NG1
station: Nagai
coordinates: 55 02.36'N 160 04.15'W
elevation: 773 ft
site: cemented to bedrock at remote sp station
type of instrument: Kinemetrics SMA-1 1g unit
date installed: 7/26/80
serial no.: 327 (7/26/80)
orientation: S20E
sensitivity: S20E 1.80cm/g UP 1.85cm/g N70E 1.75cm/g
natural freq.:
damping:
records: none
comments: runs off 12v power supply at sp station
has trigger relay
one time trace needs adjusting
file updated: 12/31/80 jm

SAN
station: Sand Point
coordiantes: 55 20.40'N 160 29.83'W
elevation: 75 ft
site: bolted to cement pier
type of instrument: Kinemetrics SMA-1 1/2g unit
date installed:
serial no.: 959 (7/28/80)
orientation: S70W
sensitivity: S70W 2.07cm/0.5g UP 1.96cm/0.5g S20E 1.80cm/0.5g

| | | | |
|---|---|---|---|
| natural freq.: | 17.2 hz | 17.8 hz | 17.3 hz |
| damping: | 0.60 | 0.60 | 0.60 |

records: 4/6/74 01:53
4/6/74 03:56
4/7/74
7/7/75
1/27/79
2/13/79
comments: runs off trickle charger
no measure of absolute time
?? to ?? #202 located at school oriented at N60W
?? to 7/28/80 #202 was here at an orientation of N17E
file updated: 12/31/80

SGB
station: San Diego Bay
coordinates: 55 32.75'N 160 27.23'W
elevation: 886 ft
site: cement pad in dirt and rubble
type of instrument: Kinemetrics SMA-1 1g unit
date installed: 8/8/80
serial no.: 2677 (8/8/80)
orientation: N70E
sensitivity: N70E 1.85cm/g UP 1.87cm/g N20W 1.87cm/g

| | | | |
|---|---|---|---|
| natural freq.: | 25.9 hz | 25.7 hz | 26.1 hz |
| damping: | 0.60 | 0.60 | 0.60 |

records: none
comments: no measure of absolute time

```
          runs off only internal batteries
          one time trace out of line
          calibration indicates something may be wrong
file updated: 12/31/80 jm


SIM
station: Simeonof
coordinates: 54 55.2'N  159 15.5'W
elevation:
site: bolted to cement pad set on ground
type of instrument: Kinemetrics SMA-1  1g unit
date installed:
serial no.: 2038 (6/13/80)
orientation: N23.5W
sensitivity: N23.5W 1.72cm/g  UP 1.86cm/g  S66.5W 1.66 cm/g
natural freq.:      25.8 hz      25.7 hz          27.4 hz
damping:            0.60         0.60             0.60
records: none
comments: runs off external battery
          there are no internal batteries for back-up
          this instrument runs for 60 sec when triggered
          there is no measure of absolute time
          there is no sp station here
file updated: 10/26/80 jm


SNK
station: Sanak
coordinates: 54 28.44'N  162 46.52'
elevation: 522 ft
site: cemented to bed rock at remote sp station
type of instrument: Kinemetrics SMA-1  1g unit
date installed: 7/20/80
serial no.: 4155 (7/20/80)
orientation: N90E
sensitivity: N90E 1.87cm/g  UP 1.98cm/g  N000 1.94cm/g
natural freq.:    25.6 hz      25.5 hz        24.5 hz
damping:          0.60         0.60           0.60
records: none
comments: runs off 12v power supply at sp station
          has trigger relay
          but cannot tell trigger from DLG trigger
file updated: 12/31/80 jm
```

APPENDIX II

Lamont-Doherty Geological Observatory Strong Motion Sites
in the Caribbean

Caribbean area

stations:

| | |
|---|---|
| Anegada | ABV |
| Antigua | AWI |
| Barbuda | BWI |
| St. John | SJV |
| St. Thomas | VST |

ABV
station: Anegada
coordinates: 18 43.92'N 064 20.22'W
elevation: 9 ft
site: installed in 55 gal drum on concrete foundation of abandoned building
type of instrument: Kinemetrics SMA-1 1/2g unit
date installed: 3/20/78
serial no.: 3176 (3/20/78)
orinetation: N090E
sensitivity: N90E 1.81cm/0.5g UP 2.04cm/0.5g N000 1.84cm/0.5g
natural freq.: 18.5 hz 17.9 hz 18.3 hz
damping: 0.60 0.60 0.60
records: none
comments: solar cell powered
file updated: 1/18/81 jm

AWI
station: Antigua
coordinates: 17 2.70'N 061 51.60'W
elevation: 1113 ft
site: installed in cement cable vault
type of instrument: Kinemetrics SMA-1 1/2g unit
date installed: 2/20/81
serial no.: 961 (2/20/81)
orientation: 000N
sensitivity: 000N 1.90cm/0.5g UP 2.03cm/0.5g N270W 1.90cm/0.5g
natural freq.: 17.9 hz 17.6 hz 17.8 hz
damping: 0.60 0.60 0.60
records: none
comments: runs off internal batteries
file updated: 4/7/81 jm

BWI
station: Barbuda
coordinates: 17 39.90'N 061 47.40'W
elevation: 108 ft
site: installed in 55 gal. drum cemented in ground
type of instrument: Kinemetrics SMA-1 1/2g unit
date installed: 2/18/81
serial no.: 966 (2/18/81)
orientation: N000
sensitivity: N000 1.91cm/0.5g UP 1.74cm/0.5g N270W 2.08cm/0.5g
natural freq.: 17.4 hz 18.6 hz 17.1 hz
damping: 0.60 0.60 0.60
records: none
comments: runs off internal batteries
file updated: 4/7/81 jm

Appendix II (con't.)

SJV
station: St. John
coordinates: 18 20.70'N 064 45.72'W
elevation: 840 ft
site: installed on concrete basement of park ranger's house
type of instrument: Kinemetrics SMA-1 1/2g unit
date installed: 3/22/78
serial no.: 3170 (3/22/78)
orientation: N270W

| | | | |
|---|---|---|---|
| sensitivity: | N270W 1.72cm/0.5g | UP 1.82cm/0.5g | N180 1.67cm/0.5g |
| natural freq.: | 18.5 hz | 18.1 hz | 19.0 hz |
| damping: | 0.60 | 0.60 | 0.60 |

records: none
comments: runs off trickle charger
file updated: 1/18/81 jm

VST
station: St. Thomas
coordinates: 18 21.24'N 064 57.42'W
elevation: 1116 ft
site: installed on concrete pier in vault
type of instrument: Kinemetrics SMA-1 1/2g unit
date installed: 9/?/79
serial no.: 962 (3/5/81)
orientation: N000

| | | | |
|---|---|---|---|
| sensitivity: | N000 1.97cm/0.5g | UP 1.95cm/0.5g | N270W 1.89cm/0.5g |
| natural freq.: | 17.2 hz | 17.4 hz | 18.9 hz |
| damping: | 0.60 | 0.60 | 0.60 |

records: 2/14/80
comments: runs off trickle charger
prior to 9/?/79 there was another SMA here
from 9/?/79 to 3/5/81 #1064 was here at same orientation
file updated: 4/7/81 jm

## APPENDIX III

### Brief Design Description of SMA Interface with L-DGO Seismic Networks in Aleutians and Caribbean for Transmission of Exact SMA Operation (ON-OFF) Times

1. The purpose of this Appendix is to document the changes on the SMA/network interface for transmission of SMA ON/OFF signals through network telemetry. In addition, the same system provides an automatic calibration of the network seismometer at the SMA site.
2. The present method of signalling SMA activity, a 409.6 Hz tone via the RF telemetry links, has a number of problems as demonstrated by recent experience:
   a) The telemetry link must be operational at the time of the event.
   b) The increased noise level due to overmodulation of the short-period component VCO's during an event tends to mask the 400 Hz signal.
   c) Identification of the signalling SMA by amplitude level coding is difficult with two components, and virtually impossible with three components on the same telemetry link.
3. After considering a number of alternatives, we have decided upon the following design as offering the best combination of cost, availability, development risk,

robustness (defined here as minimization of fauliure effects) and performance (see attched Figure 4).

4. Standard time code generators (Kinemetrics TCG-1A) will be installed in most of the SMA-1's, i.e. all of the telemeter-linked units in the Shumagins, and all of the telemeter-linked units in the eastern end of the Caribbean network. The 24 hour mark generated by the TCG-1A will be used to initiate a short period seismometer calibrate cycle at each seismic network station. The time of occurrence of the calibrate signal will be recorded at the central station only by print-out on the system printer. Actual recording of the calibration signal response is optional and independent from the SMA signalling. Since the TCG-1A generators are fairly stable (daily drift < .1 sec) we can uniquely identify the source (station) by spacing the occurrence of the 24 hour marks for the SMA's on the particular telemetry link. If there is any doubt from which site the calibrate pulse came, occasional observation (i.e. digital recording) of the seismometer calibration signal and deduction of the drift of each TCG-1A will indicate which station the signal is from. In essence we are calibrating the remote TCG, using the central station clock.

When we have recovered the SMA record, it is only necessary to read the recorded time from the time code on the accelerogram and obtain the necessary correction

from the central station recorded data.

Note that as far as time of SMA triggering is concerned it is unnecessary to signal or record; the print-out of the system printer is sufficient to determine exact SMA ON/OFF times.

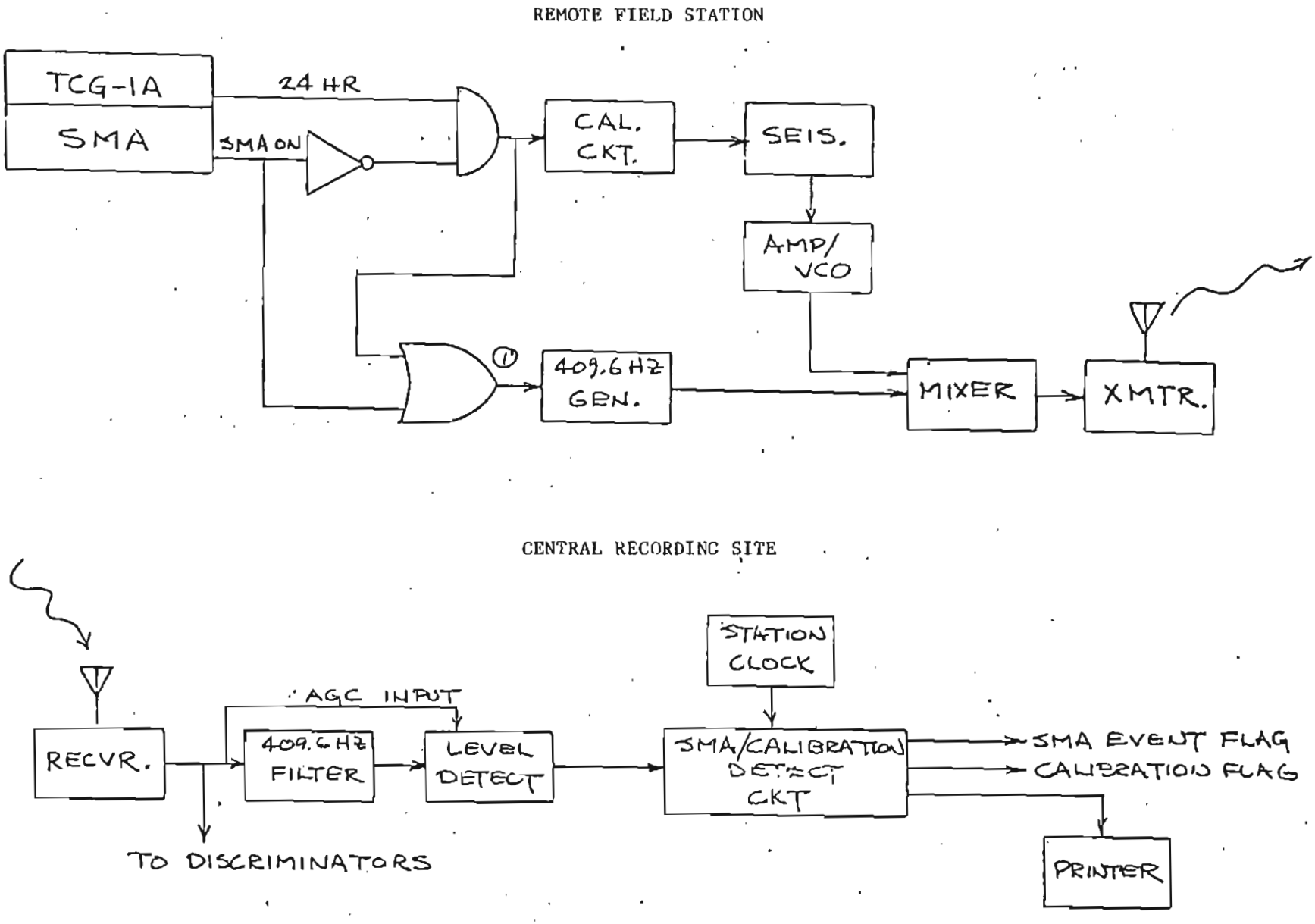


Figure 4. Schematic diagram for SMA trigger (on-off) signal transmission at remote site and central recording site. Note that discrimination between calibrate seismometer and SMA-ON tones is carried out by tone-length detect circuit.