U.S. DEPARTMENT OF THE INTERIOR
U.S. GEOLOGICAL SURVEY

Cruise Report and Preliminary Results
U.S. Geological Survey Cruise P1-93-AR
Northwind Ridge and Canada Basin, Arctic Ocean
Aboard USCGC POLAR STAR
August 16 - September 15, 1993

By

Arthur Grantz (Senior Scientist)[1], P.E. Hart[1], R.L. Phillips[1], Michael McCormick[1], R.G. Perkin[2], Ruth Jackson[3], Alan Gagnon[4], Shusun Li[5], Carl Byers[5], and K.R. Schwartz[5],

Open-File Report 93-389

This report is preliminary and has not been reviewed for conformity with U.S. Geological Survey editorial standards or with the North American Stratigraphic Code. Any use of trade, product, or firm names is for descriptive purposes only, and does not imply endorsement by the U.S. Government.

[1]U.S. Geological Survey, Menlo Park, California
[2]Canadian Institute of Ocean Sciences, Sidney, British Columbia
[3]Geological Survey of Canada, Dartmouth, Nova Scotia
[4]Woods Hole Oceanographic Institution,Woods Hole, Massachusetts
[5]Geophysical Institute, University of Alaska-Fairbanks

1993

CONTENTS

Page

Introduction and Acknowledgements....1
Acquisition of Seismic Reflection Data in Polar Pack Ice....3
Investigations and Preliminary Results
- Geologic Framework and Tectonic History of the Amerasia Basin, Arctic Ocean....9
- Sampling for Possible Radionuclide Contamination of Russian Origin in the Canada Basin Region....15
- Seismic Refraction....17
- Climate History of the Western Arctic Ocean....20
- Oceanography of the Canada Basin/Northwind Ridge Region....21
- Sea Ice Physics....23
- Sediment in Sea Ice....24
- Paleoclimate and Paleooceanography of the Amerasia Basin from AMS ^{14}C Dating....28

Other Investigators....31
Members of the Scientific Party....34
References Cited....35

FIGURES

Page

Figure 1. Index map of Arctic Ocean after Figure 1 of 1992 Arctic Summer West Scientific Party (1993), showing principal geographic features and preliminary model for Cenozoic extension in the Chukchi Borderland based on bathymetry and the seismic reflection data acquired from the USCGC Polar Star in 1988 and 1992. Also shown are the pole of rotation for some models that propose opening of the Amerasia Basin by rotational rifting of Arctic Alaska from North America in middle Cretaceous time and a possible location of the required transform fault along the Amerasia side of the Lomonosov Ridge. NWR, CTF, and ATF denote Northwind Ridge and postulated Charlie and Arlis Transform faults. Large arrows (Thorndike, 1986) show general circulation of pack ice in the Amerasia Basin.....2

Figure 2. Bathymetric map of Northwind Ridge, Canada Basin, and vicinity, Arctic Ocean, showing location of seismic reflection, seismic refraction, and aeromagnetic data acquired during U.S. Geological Survey cruise P1-93-AR. Heavy lines show the location of approximately 1,640 km of seismic reflection profiles obtained with 876 to 1304 cu. in., 4 to 6 air gun source array and 2- or 12-channel hydrophone streamers. Double lines show location of seismic refraction profiles generated with a towed 2,000 or 3,000 cu. in., 2 or 3 air gun source array and recorded with hydrophones deployed from ice floes. Approximately 260 km of additional seismic reflection data were recorded concurrently with the refraction profiles. In addition, 28 sonobuoy seismic wide angle reflection/refraction profiles were recorded in conjunction with the seismic reflection data. Cross-hatched lines indicate areas over which approximately 1,700 km of airborne proton magnetometer data were collected by Coast Guard HH65 helicopter.....4

Figure 3. Towed seismic source array and underwater rigging used to collect air gun reflection data in the Arctic ice pack from *USCGC POLAR STAR* in 1988 (Fig. 2A) and 1992 (Fig. 2B). At normal towing speeds the weight of the cast steel ball kept the array in the small area of mainly ice-free water that formed close behind the ship when the sea ice was not under strong compression.....6 and 7

Figure 4. Bathymetric map of Northwind Ridge, Canada Basin, and vicinity, Arctic Ocean, showing location of marine gravity and 3.5 kHz bathymetric-shallow subbottom reflection data and piston cores, box cores, and hydrocasts collected from USCGC Polar Star during U.S. Geological Survey cruise P1-93-AR. The marine gravity and 3.5kHz profiles were collected along most of the track line for a total profile length of about 4,200 km for each data set. See Tables 1 to 4 and 7 for tabulation of data on the piston cores, box cores, water samples, and hydrocasts collected at the sample sites shown.....11

TABLES

Page

Table 1. Piston Cores collected from Northwind Ridge, western Arctic Ocean, during U.S. Geological Survey cruise P1-93-AR. Cores are three inches (7.6 cm) in diameter.....12

Table 2. Box cores collected from Northwind Ridge, Canada Basin, and continental slope of Alaskan Beaufort Sea, Arctic Ocean during U.S. Geological Survey cruise P1-93-AR. Box cores 1 through 12 collected with a 30 x 20 x 60 cm box; box cores 13 through 21 with 30 x 20 x 44 cm box.....13

Table 3. Water column samples collected over Northwind Ridge, Canada Basin, and Alaskan Beaufort Sea continental slope, western Arctic Ocean during U.S. Geological Survey cruise P1-93-AR for analysis of radionuclides. Samples were collected with a rosette consisting of a CTD and 24 Nisken bottles of 10 l capacity suspended from a conducting cable. At most stations water samples were collected from all major water masses from a few meters above the sea bed to about 6.5 m below the sea surface.....16

Table 4. Hydrographic casts made by Institute of Ocean Sciences (IOS) over Northwind Canada Basin, and Beaufort Sea continental slope of western Arctic Ocean during U.S. Geological Survey cruise P1-93-AR (IOS Cruise 9350). Primary CTD was a Sea-Bird Electronics Model SBE 911 plus (serial number 09P7975-0302); secondary CTD was a Sea-Bird Electronics Model Sea-Bird Electronics Model SBE 19 (serial number 197975-1934).....22

Table 5. Sea ice cores collected for measurement of physical properties in the Northwind Ridge and Canada Basin areas of the western Arctic Ocean by the Geophysical Institute, University of Alaska-Fairbanks, during U.S. GeologicalSurvey cruise P1-93-AR.....25

Table 6. Sea ice and snow bulk samples and cores taken from sediment-in-sea ice studies from the Northwind Ridge and Canada Basin areas of the western Arctic Ocean by the U.S. Geological Survey during cruise P1-93-AR.....27

Table 7. Water column samples collected for dissolved inorganic carbon, $\Delta^{14}C$, and $\delta^{18}O$ analysis from Northwind Escarpment and Canada Basin areas, western Arctic Ocean by Woods Hole Oceanographic Institution during U.S. Geological Survey cruise P1-93-AR.....30

INTRODUCTION AND ACKNOWLEDGEMENTS

From August 16 to September 15, 1993 the U.S.Geological Survey (USGS), with substantial funding from the U.S. Department of State and the Office of Naval Research, sponsored a binational, multidisciplinary, multi-institutional cruise to Northwind Ridge and the Canada Basin, western Arctic Ocean aboard the icebreaker U.S. Coast Guard Cutter (USCGC) Polar Star. The generalized track line of the cruise, which is designated P1-93-AR, is shown in Figures 1 and 3. Position of our tracklines and stations was determined from Global Positioning System (GPS) fixes at two minute intervals.

Principal objectives of the cruise were to: determine whether contamination by long-lived radionuclides from the disposal of solid and liquid nuclear waste in the Kara and Barents Seas by the Former Soviet Union (FSU) has reached the North American Arctic; determine the geologic framework of Northwind Ridge and the Canada Basin as a basis for understanding the tectonic history of the Amerasia Basin of the Arctic Ocean and its continental margins; and acquire cores to obtain a better understanding of the initiation and early development of glacial conditions in the Arctic, and of the modern Arctic environment. Additional topics of investigation were the water structure and current systems of the western Arctic Ocean, the role of sea ice as an agent for the removal of clastic sediment and biogenic material from Arctic continental shelves and its transportation to the deep central Arctic Basin, the physics of sea ice during the time of maximum melt and subsequent refreezing as an aid to interpreting Synthetic Aperture Radar (SAR) satellite imagery over the Arctic Ocean, and the status of anthropogenic contamination in the North American Arctic.

Sea ice conditions in the western Arctic Ocean during the second half of August and the first half of September, 1993 were exceptionally favorable for the research program of cruise P1-93-AR. Moderate concentrations of sea ice were present over most of Northwind Ridge and the southwestern Canada Basin, permitting seismic reflection data acquisition in 7/10's or less sea ice over Northwind Ridge as far as 79° N lat. Heavy concentrations of multiyear sea ice in parts of the southeastern Canada Basin, however, prevented us from acquiring critical seismic data in that area.

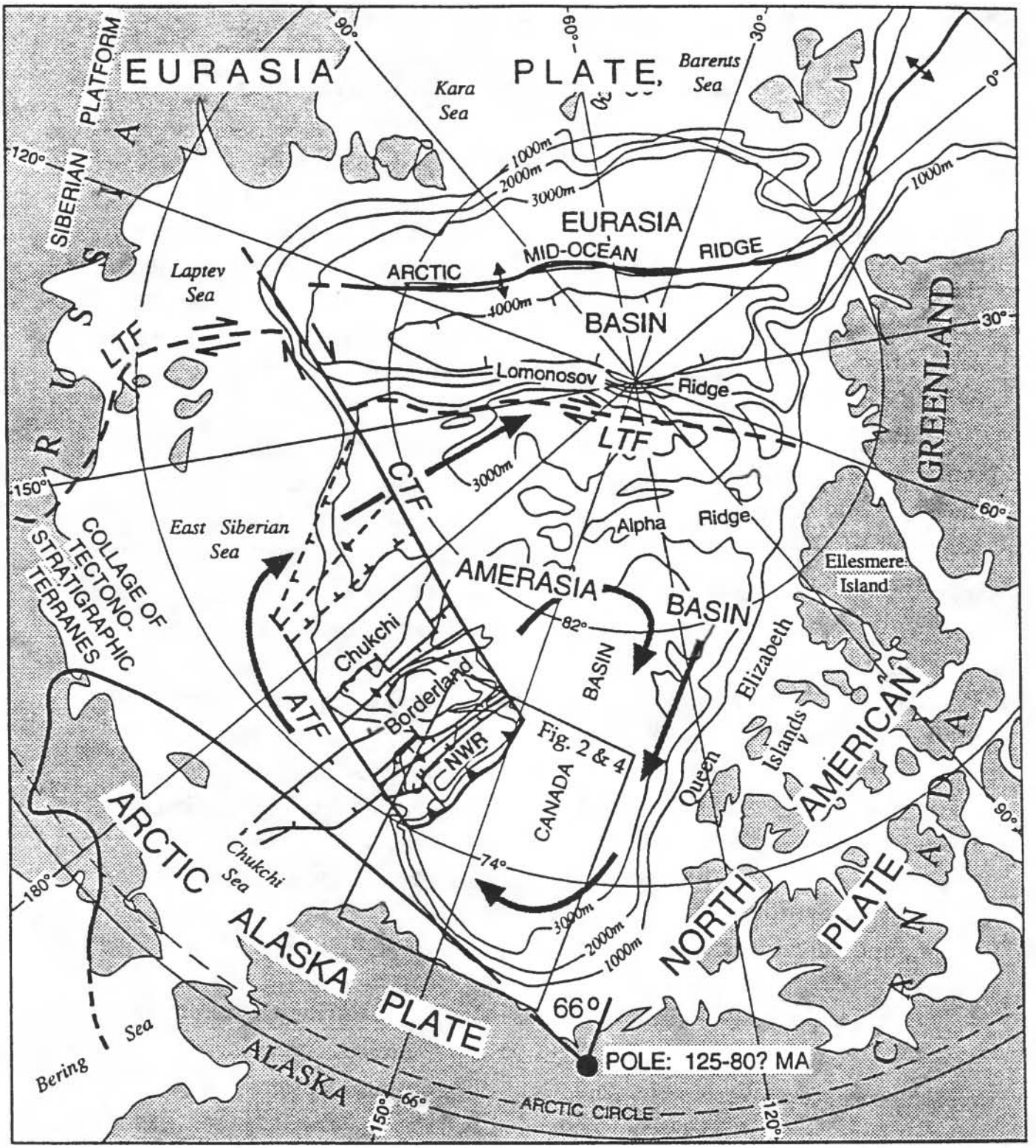

Figure 1. Index map of Arctic Ocean after Figure 1 of 1992 Arctic Summer West Scientific Party (1993), showing principal geographic features and preliminary model for Cenozoic extension in the Chukchi Borderland based on bathymetry and the seismic reflection data acquired from the USCGC Polar Star in 1988 and 1992. Also shown are the pole of rotation for some models that propose opening of the Amerasia Basin by rotational rifting of Arctic Alaska from North America in middle Cretaceous time and a possible location of the required transform fault along the Amerasia side of the Lomonosov Ridge. NWR, CTF, and ATF denote Northwind Ridge and postulated Charlie and Arlis Transform faults. Large arrows (Thorndike, 1986) show general circulation of pack ice in the Amerasia Basin.

Close collaboration between several institutions and many researchers was required to mobilize and carry out the complex scientific program that we conducted from the Polar Star during P1-93-AR. Members of the scientific party are listed at the end of this report, and the Principal Investigators and their institutional affiliation are presented below under "Investigations and Preliminary Results". We wish to acknowledge the scientific collaboration and support of Richard Z. Poore, Edward R. Landa, and Peter W. Barnes of the U.S. Geological Survey, Walter W. Nassichuk of the Geological Survey of Canada, Glenn A. Jones of the Woods Hole Oceanographic Institution, G. Leonard Johnson of the Office of Naval Research, David L. Clark of the University of Wisconsin, Martin O. Jeffries of the Geophysical Institute, University of Alaska-Fairbanks, E.U. Curtis Bohlen of the U.S. Department of State, and Thomas Beasley of the U.S. Department of Energy. Additional scientific collaborators and their research interests are presented in the section "Other Investigators", near the end of this report.

We wish to thank the U.S. Coast Guard for its support of the cruise, which was critical to its realization. In particular, the support and encouragement provided by Captain Alan F. Walker and the Ice Operations Division of the Coast Guard is greatly appreciated, as is the assistance provided by the officers and enlisted personnel of the USCGC Polar Star and its aviation detachment .

ACQUISITION OF SEISMIC REFLECTION DATA IN POLAR PACK ICE

Study of the geologic framework of Northwind Ridge and the Canada Basin is a principal goal of U.S. Geological Survey (USGS) research in the Amerasia Basin of the Arctic Ocean. Because the acquisition of continuous seismic reflection profiles is essential to a viable study, and because most of this region is perennially covered with sea ice, the first step was development of an air gun and hydrophone streamer system that could be towed through multiyear pack ice. In 1988 the USGS developed and built a towed system consisting of a 150-m, two-channel hydrophone streamer and a single 195 cu. in. air gun (Fig. 2A). This system was used in heavy pack ice for the first time in September, 1988 to acquire 155 km of seismic reflection profiles in the Northwind Ridge area of the Amerasia Basin. The shoot interval was 8 seconds at a firing pressure of 2,000 psi. A modification of the 1988 system, using a custom-built umbilical towing cable and a six air gun, 674 cu. in. source array mounted on a triangular steel frame (Fig. 2B)

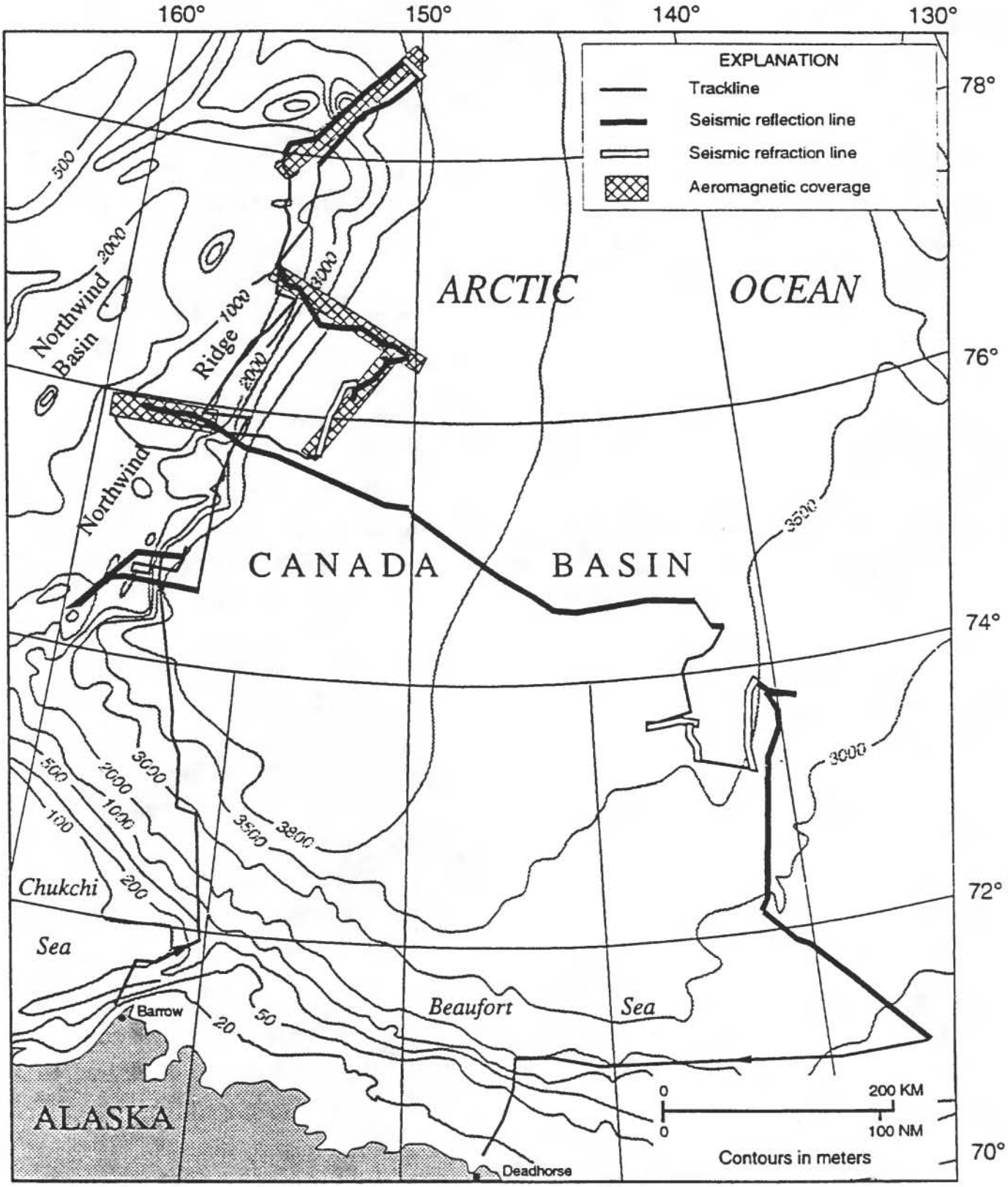

Figure 2. Bathymetric map of Northwind Ridge, Canada Basin, and vicinity, Arctic Ocean, showing location of seismic reflection, seismic refraction, and aeromagnetic data acquired during U.S. Geological Survey cruise P1-93-AR. Heavy lines show location of approximately 1,640 km of seismic reflection profiles obtained with 876 to 1304 cu. in., 4 to 6 air gun source array and 2- or 12-channel hydrophone streamers. Double lines show location of seismic refraction profiles generated with a towed 2,000 or 3,000 cu. in., 2 or 3 air gun source array and recorded with hydrophones deployed from ice floes. Approximately 260 km of additional seismic reflection data were recorded concurrently with the refraction profiles. In addition, 28 sonobuoy seismic wide angle reflection/refraction profiles were recorded in conjunction with the seismic reflection data. Cross-hatched lines indicate areas over which approximately 1,700 km of airborne proton magnetometer data were collected by Coast Guard HH65 helicopter.

was used in 1992 (USGS cruise P1-92-AR) to acquire approximately 500 km of reflection data. The air guns for this survey were fired at 10 second intervals at a pressure of 2,000 psi. For P1-93-AR, further modifications to the air gun array increased its total volume to between 876 and 1,303 cu. in. using combinations of four to six air guns. Available air compressor capacity dictated a shot interval of 12 to 16 seconds. Approximately 1,900 km of reflection data were acquired during P1-93-AR. About 1,640 km of these data were acquired using the air gun configuration just described, and about 260 km were acquired during refraction shooting using a two to three air gun, 2,000 to 3,000 cu. in. array fired at intervals of 60 seconds.

In 1992 and 1993 the USGS air gun source array and hydrophone streamer were towed from the stern chock of the POLAR STAR by a four inch diameter dacron towing hawser. The hawser was shackled to the dry end of a custom designed composite "umbilical cable" 7.1 cm in diameter and 22 m long that carried compressed air and electrical conductors for the seismic array through the air-sea interface. To resist the severe impacts that the cable would receive from ice floes, it was encased in heavy galvanized steel helical armor and jacketed with polyurethane. The steel armor also served as the stress member that supported the seismic gear. Three 2,000 psi air hoses (1/2 inch inside diameter) and 22 pairs of electrical conductors encased in polyurethane inside the helical steel armor provided compressed air and trigger pulses for the air guns and electrical circuits for the hydrophone streamer and depth transducers. The air gun array was towed about 20 m below the sea surface, and the tow point for the hydrophone streamer lay about 19 m below the sea surface, where they were below the maximum depth of propellor turbulence at normal power levels. A 2,800 lb (1270 kg) cast steel ball suspended from the helical steel stress member kept the umbilical cable at a high angle (about 70° or 75°) to the water surface at the usual towing speeds of 4 or 5 knots. This high angle kept the seismic gear close astern, within the small area of ice-free water that forms behind the *POLAR STAR* at normal towing speed when the ice was not under active compression. At higher speeds or in heavy ice, when the ship had to apply higher levels of power, the tow angle reached 30° or less and the seismic gear was forced close to the surface where it commonly sustained severe sea-ice impacts from large ice floe fragments. On a few occasions the entire source array was thrown out of the water. A steel cone (the "trumpet"), protected the air hoses and electrical lines

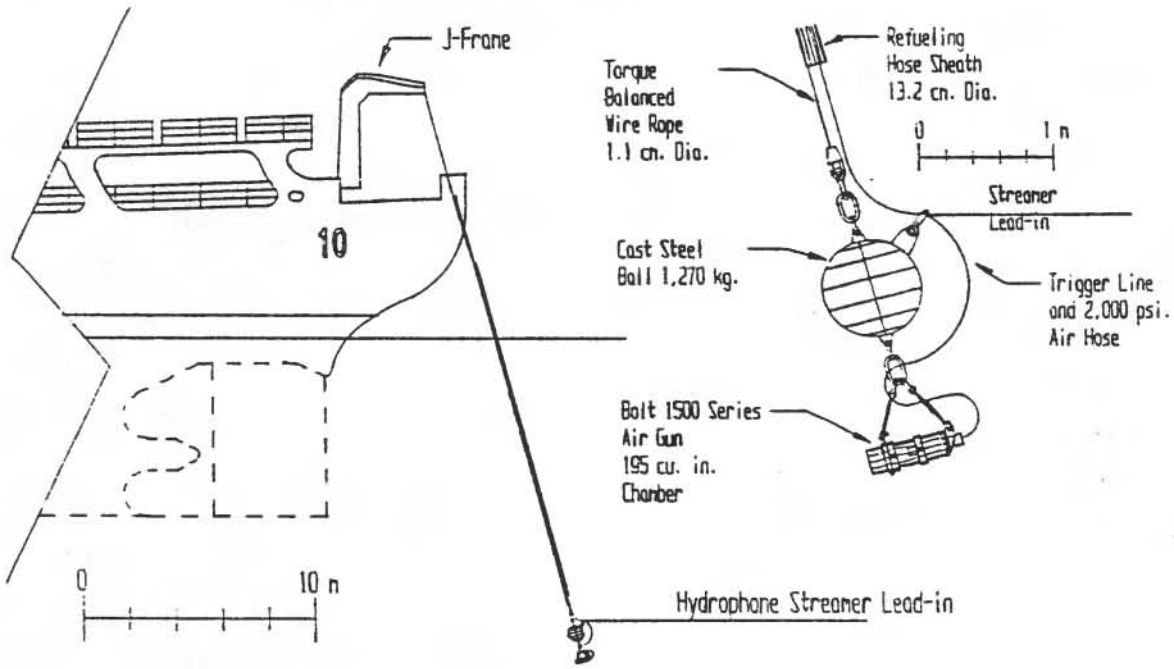

Figure 3A

Figure 3. Towed seismic source array and underwater rigging used to collect air gun reflection data in the Arctic ice pack from *USCGC POLAR STAR* in 1988 (Fig. 3A) and 1992 (Fig. 3B). At normal towing speeds the weight of the cast steel ball kept the array in the small area of mainly ice-free water that formed close behind the ship when the sea ice was not under strong compression.

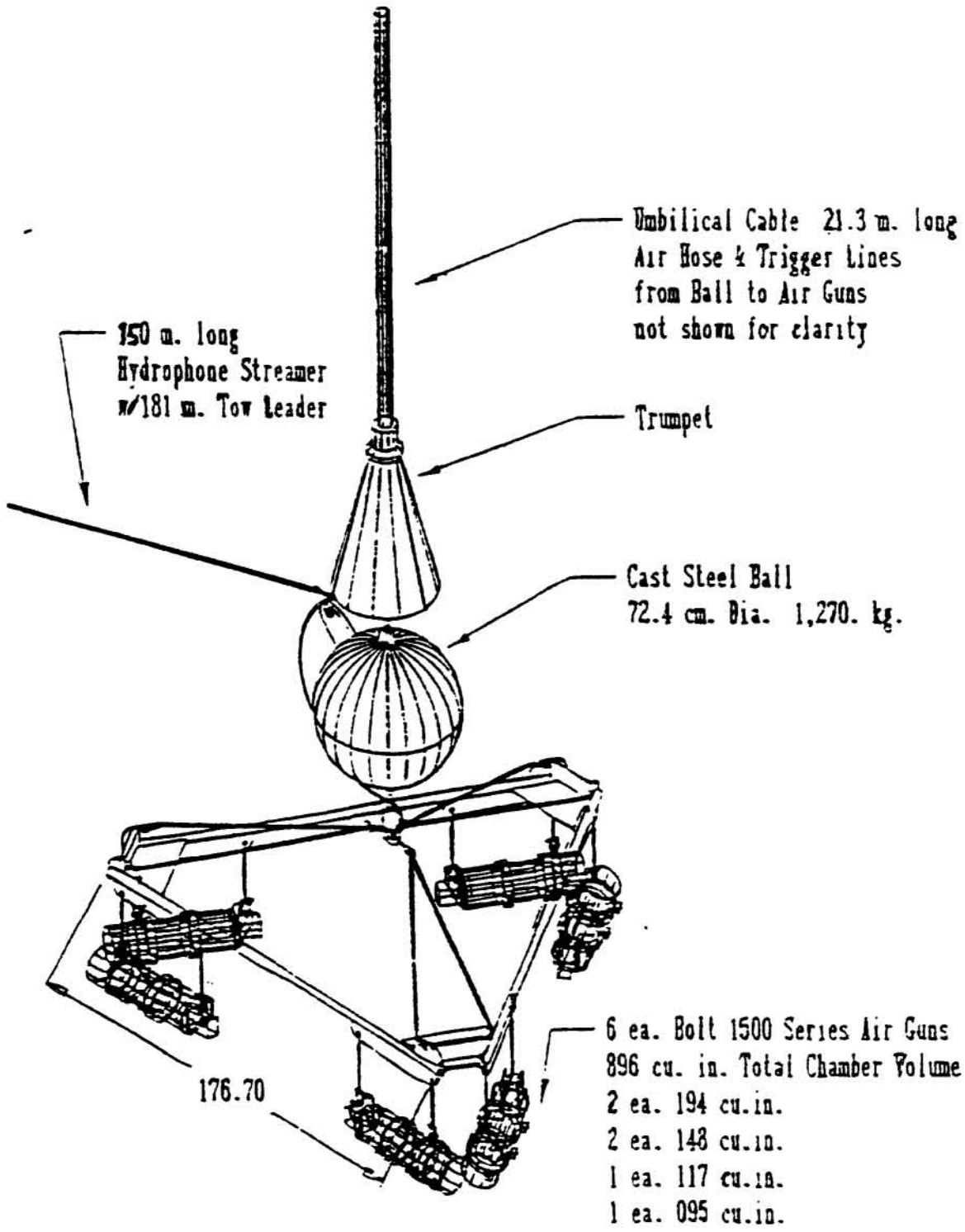

Figure 3B

Figure 3. Towed seismic source array and underwater rigging used to collect air gun reflection data in the Arctic ice pack from *USCGC POLAR STAR* in 1988 (Fig. 3A) and 1992 (Fig. 3B). At normal towing speeds the weight of the cast steel ball kept the array in the small area of mainly ice-free water that formed close behind the ship when the sea ice was not under strong compression.

from sea ice impacts where they emerged from the wet end of the umbilical cable. The hydrophone streamer lead-in cable was towed from the steel ball, and the air guns were suspended in pairs from the corners of a triangular steel frame weighing approximately 1,500 lbs (680 kg) that was suspended from the steel ball. The total weight of the towed seismic gear is approximately 4.500 lb (2,040 kg). Presumably due to its weight, and to the drag exerted by the hydrophone streamer tethered to the steel ball, there was no tendency for the towed seismic gear (or the predecessor deployed in 1988) to spin under tow.

We did not use a standard hydrophone streamer depth control system because commercially available depth control "birds" would be vulnerable to severe damage whenever above normal levels of propellor wash or rising ice fragments brought the streamer to the surface. A drogue chute was deployed from the end of the streamer to promote depth stability under tow, and pressure depth transducers within the streamer showed that its depth was fairly constant at 30 to 40 m when standard towing speeds of 4 to 5 knots were achieved.

The ability of the seismic system to work in heavy pack ice can be gauged from the 1992 field season (cruise P1-92-AR), when most of the study area was covered by 8/10 to 10/10 sea ice and it was commonly necessary to profile through extensive unbroken ice floes with pressure ridges. Overall, 60% or more of the ice pack encountered that year consisted of multiyear floes with pressure ridges. Where the ridges exceeded 10 to 15 m in thickness they usually brought the Polar Star to a halt. At such times the air guns and hydrophone streamer had to be retrieved to free the ship to break through the ridge by backing and ramming, which could not be done with the seismic gear in the water. Optimal towing speed through both first year and multiyear pack ice was 4 to 5 knots. At higher speeds large fragments of sea ice overridden by the advancing ship rose to the surface beneath the seismic gear, and sometimes brought the air gun array and streamer to the surface. Although this happened several times in 1992, damage to the towed seismic gear was limited to breaks in air lines and electrical circuits, which were repaired at sea. Fortunately, no air guns, streamers, or other equipment were lost or severely damaged that year. However, the high sea ice concentrations (8/10 to 10/10) encountered in 1992 terminated our seismic reflection lines, on average, after about ten hours of profiling, at which time relatively minor repairs were usually required. The high sea ice concentrations also forced frequent undesirable changes in course and speed. In 1993, when seismic reflection profiling was done mainly in 3/10 to 8/10 sea ice, only minor

damage was sustained by the air gun array, although a two-channel hydrophone streamer was lost to sea ice impacts. Accordingly, in 1993 only a few seismic lines were terminated prematurely by sea ice-damage to the towed seismic gear, and several profiles exceeded 36 hours in duration. The 1993 profiles could also be run at more constant courses and speeds than those obtained in the heavier sea ice encountered in 1992.

INVESTIGATIONS AND PRELIMINARY RESULTS

Geologic Framework and Tectonic History of the Amerasia Basin, Arctic Ocean

Principal Investigators: Arthur Grantz, P.E. Hart, and S.D. May, U.S. Geological Survey, 345 Middlefield Road, Menlo Park, CA 94025

Geologic studies in Alaska and Canada indicate that the Amerasia Basin was formed by rotational rifting of Arctic Alaska away from Arctic Canada about a pole of rotation in the Mackenzie Delta region beginning about 125 million years ago. Little geological or geophysical data, however, exist from the basin itself by which this hypothesis can be tested. In addition, a simple rotational model for the basin fails to explain the high-standing ridges of the Chukchi Borderland and the extensive Alpha and Mendeleev submarine ridge systems. The origin of the Amerasia Basin is of interest because it is the largest piece of oceanic crust that lacks a geometrically rigorous plate tectonic explanation, and because an understanding of its origin and history is required for a complete understanding of the circum-Arctic land masses and their mineral fuel potential. For example, the structures that trapped the giant Prudhoe Bay and associated oil and gas fields are thought to have been created by the processes that created the Amerasia Basin.

The present investigation is directed at the geologic framework and tectonic history of the western Chukchi Borderland and the adjacent Canada Basin, which comprise the North American segment of the Amerasia Basin. Studies from the Polar Star in 1992 focussed on the western part of the borderland. The 1993 field program (Fig. 1) investigated the structural relationships between Northwind Ridge, the eastern ridge of the borderland, and the Canada Basin, and the structural character and stratigraphy of the Canada Basin. A major achievement in 1993 was the acquisition of a seismic reflection profile across

nearly the entire Canada Basin from Northwind Ridge at 76° N to the eastern Beaufort shelf. This profile will enable us to correlate the sedimentary strata of Canada Basin with the well known section of the eastern Beaufort shelf and allow us to relate the acoustic stratigraphy of Northwind Ridge to that of Canada Basin.

The following geophysical and bedrock geologic data were collected from the Polar Star during the 1993 field program. Location of the data are shown in Figure 1 and 3, and Tables 1 and 2.

- 1,900 km of two channel and twelve channel seismic reflection profiles obtained with the seismic reflection array illustrated in Figure 2B.
- 28 sonobuoy seismic wide angle reflection/refraction profiles using overage U.S. Navy sonobuoys.
- 4,200 km of marine gravity meter data acquired with LaCoste and Romberg Land/Sea Gravity Meter No. S-53).
- 1,700 km of total field aeromagnetic profiles collected by Coast Guard Aviation Detachment 132 with the HH65 helicopter using a Geometrics model G-816 proton magnetometer provided by the U.S. Geological Survey.
- 4,200 km of high-resolution seismic profiler and bathymetric data using the Polar Star's hull-mounted array of 16 Ocean Data 3.5 kHz model TR-109 transducers.
- Cores that sampled pre-Quaternary bedrock or talus from submarine outcrops of bedrock

  7 piston cores

  1 trigger core

  1 box core

Shipboard examination of the nine cores that sampled bedrock along the eastern slope of Northwind Ridge in 1993, in conjunction with the bedrock cores collected in 1992, indicate that near 75° and 76° N lat the slope is underlain by abundantly fossiliferous late Paleozoic shallow water (<200 m) marine limestone and dolostone; Triassic marine shelfal(?) shale, siltstone, and sandstone; Jurassic or Cretaceous bedded rocks (possibly progradational lutite with thin turbidite beds); middle Cretaceous progradational lutite; early Late Cretaceous shallow marine tuffaceous sandstone and siltstone; and two presently undated units of siltstone and fine grained sandstone. In character and age, these dominantly shelfal marine sedimentary rocks resemble strata in the Sverdrup sedimentary basin of the Canadian Arctic Islands. Together with the high-standing, flat-topped character of Northwind Ridge the shelfal carbonate and

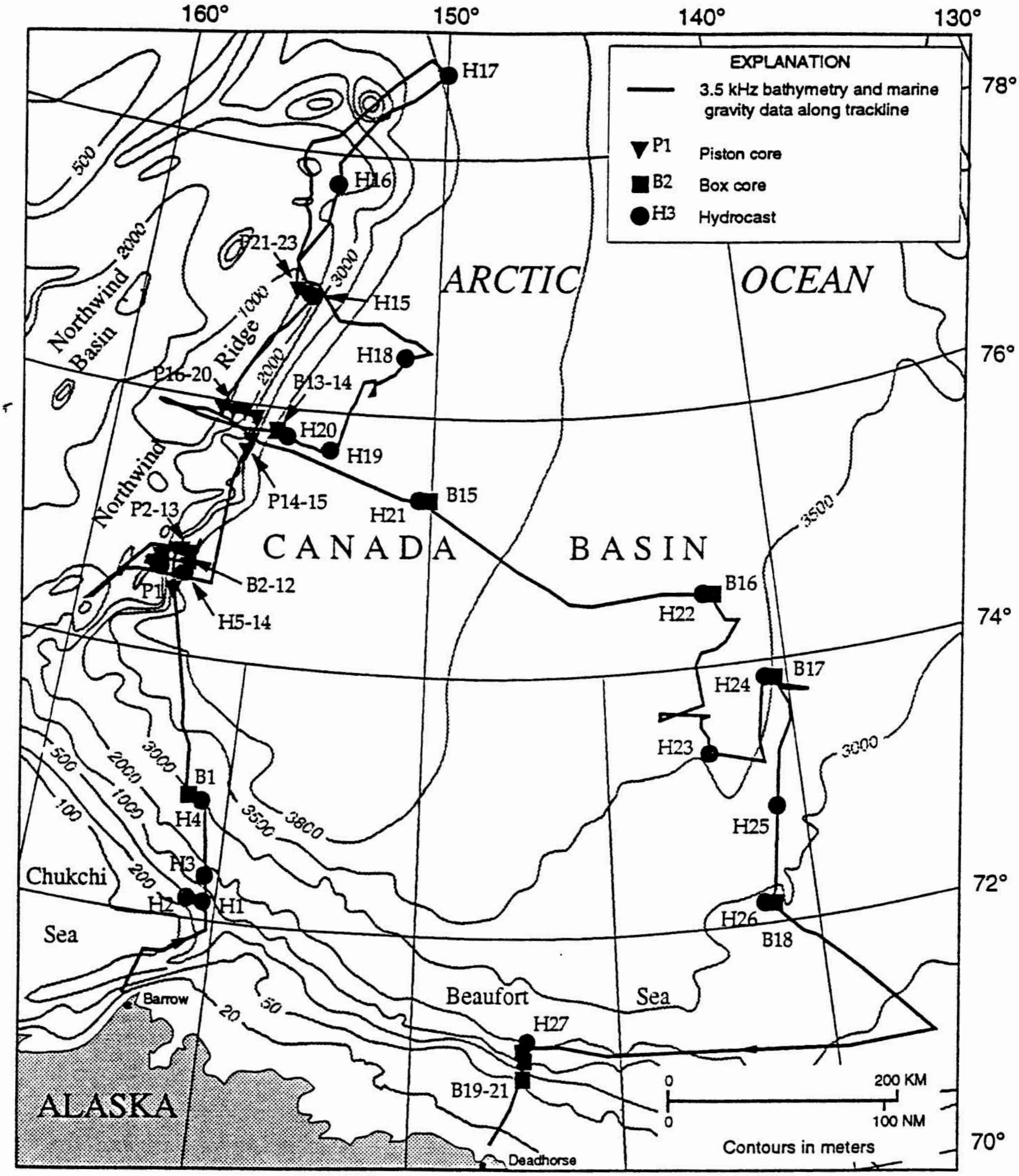

Figure 4. Bathymetric map of Northwind Ridge. Canada Basin, and vicinity, Arctic Ocean, showing location of marine gravity and 3.5 kHz bathymetric-shallow subbottom reflection data and piston cores, box cores, and hydrocasts collected from USCGC Polar Star during U.S. Geological Survey cruise P1-93-AR. The marine gravity and 3.5kHz profiles were collected along most of the track line for a total profile length of about 4,200 km for each data set. See Tables 1 to 4 and 7 for tabulation of data on the piston cores, box cores, water samples, and hydrocasts collected at the sample sites shown.

Table 1. Piston Cores collected from Northwind Ridge, western Arctic Ocean, during U.S. Geological Survey cruise P1-93-AR. Cores are three inches (7.6 cm) in diameter.

Core No.	Station No.	Lat. (N)/Long. (W)	Water Bottom (m)	Core Length (cm)	Bedrock Recovery
P1	5	74° 33.36'/157° 28.79'	3,664	159	--
P2	6	74° 49.70'/157° 04.95'	3,100	451	?
P3	7	74° 48.55'/157° 02.44'	3,545	88	x
P4	8	74° 49.23'/157° 08.93'	2,525	381	?
P5	9	74° 48.69'/157° 10.24'	2,833	146	x
P6	10	74° 48.02'/157° 13.79'	2,270	427	--
P7	11	74° 48.79'/157° 10.90'	2,430	471.5	--
P8	12	74° 48.28'/157° 14.78'	1,998	128	x
P9	12	74° 48.25'/157° 14.20'	2,065	344	--
P10	13	74° 48.53'/157° 22.79'	1,675	483	--
P11	14	74° 42.58'/157° 58.95'	918	570.5	--
P12	24	74° 41.74'/155° 44.07'	3,395	501	--
P13	25	74° 45.89'/155° 33.80'	3,551	489	--
P14	26	75° 53.09'/155° 20.68'	3,660	378	x
P15	27	75° 53.43'/155° 22.02'	3,503	534	--
P16	28	75° 53.60'/155° 22.09'	3,514	378	x
P17	29	75° 53.68'/155° 25.05'	3,192	523	--
P18	30	75° 55.22'/156° 64.76'	1,220	736	--
P19	31	75° 54.97'/156° 29.18'	1,109	818.5	--
P20	32	75° 55.05'/156° 41.41'	1,014	597	--
P21	33	76° 51.80'/154° 12.86'	1,470	683	--
P22	34	76° 54.84'/154° 38.40'	1,091	622	--
P23	35	76° 57.26'/155° 03.90'	951	579.5	--

Table 2. Box cores collected from Northwind Ridge, Canada Basin, and continental slope of Alaskan Beaufort Sea, Arctic Ocean during U.S. Geological Survey cruise P1-93-AR. Box cores 1 through 12 collected with a 30 x 20 x 60 cm box; box cores 13 through 21 with 30 x 20 x 44 cm box.

Core No.	Station No.	Date - 1993 GMT	Lat. (N)/Long. (W)	Water Bottom (m)	Core Length (cm)	Bedrock Recovery
B1	4	Aug. 18	72° 52.41'/155° 47.98'	2,934	41	--
B2	15	Aug. 21	74° 45.33'/157° 53.22'	893	37	--
B3	16	Aug. 21	74° 44.55'/157° 27.70'	1,536	35	--
B4	17	Aug. 22	74° 44.40'/157° 23.51'	1,779	34	--
B5	18	Aug. 22	74° 44.44'/157° 21.71'	1,942	35	--
B6	19	Aug. 22	74° 44.32'/157° 18.37'	2,320	37	--
B7	19	Aug. 22	74° 44.41'/157° 16.86'	2,476	41	--
B8	20	Aug. 22	74° 43.97'/157° 17.10'	2,560	41	--
B9	21	Aug. 22	74° 44.40'/157° 12.54'	3,120	10	x
B10	21	Aug. 23	74° 44.48'/157° 11.36'	3,365	48	--
B11	22	Aug. 23	74° 44.19'/157° 09.46'	3,482	48	--
B12	23	Aug. 23	74° 43.54'/156° 52.85'	3,818	40	--
B13	40	Sept. 4	75° 48.32'/155° 07.61'	3,831	25	--
B14	40	Sept. 4	75° 49.18'/155° 00.34'	3,842	24	--
B15	41	Sept. 6	75° 20.30'/150° 00.42'	3,808	8	--
B16	42	Sept. 8	74° 36.16'/142° 05.78'	3,680	11	--
B17	44	Sept. 11	73° 52.43'/140° 36.47'	3,498	36	--
B18	46	Sept. 13	72° 08.55'/141° 08.10'	2,940	31	--
B19	47	Sept. 15	71° 17.01'/147° 20.97'	2,069	40	--
B20	48	Sept. 15	71° 03.73'/147° 19.88'	1,190	36	--
B21	49	Sept. 15	71° 00.89'/147° 21.96'	401	35	--

quartz-rich terrigenous deposits cored on the ridge indicate that it is a fragment of a continental shelf. If these beds indeed correlate with those of the Sverdrup Basin, it would suggest that Northwind Ridge was originally attached to the Canadian Arctic Islands, from which it was rifted to the outer continental shelf of the East Siberian Sea during opening of the Canada Basin from late Hauterivian to middle Late Cretaceous time (Grantz and others, 1990). Seismic reflection data acquired in 1992 and 1993 suggest that a second episode of rifting separated Northwind Ridge from the East Siberian shelf and brought it to its present position in the deep Amerasia basin in Tertiary time .

Preliminary shipboard interpretation of field monitor seismic profiles collected during the cruise suggest that Northwind Ridge was thrust eastward against the oceanic crust and overlying sedimentary cover of the western Canada Basin. Two north-trending seismic profiles between 78° and 79° N appear to have crossed a high angle fault system of strike slip character that may be the Charlie transform fault that has been postulated (Grantz and others, 1992; 1992 Arctic Summer West Scientific Party, 1993) to bound the tectonically transported crustal blocks of the Chukchi Borderland on the north. An apparent northward increase in the width of the zone of compressional structures between Northwind Ridge and Canada Basin suggests that the relative movement of the ridge against the Canada Basin may have been in part rotational, rather than entirely orthogonal, with a possible pole of rotation south of the ridge.

Initial analysis of the field seismic records from Canada Basin suggest that our seismic profiles penetrated the entire sedimentary section, and mapped the top of oceanic crust beneath the western and central parts of the Canada Basin. If oceanic crustal basement is correctly identified in the seismic profiles, the thickness of the overlying sedimentary fill in the profiles is about 5 km. This is a little thinner than published estimates of 6 km for areas of the basin that lie south of the profiles that may have imaged the top of oceanic crust. The configuration of the top of the tentatively identified oceanic crust beneath the Canada Basin suggests that the large northerly-trending positive gravity anomaly in the central part of the basin at 74° 30' N, 145° 30' W is not related to a bathymetric high or other morphological anomaly that might represent an ancient spreading center. The spreading axis may lie east of the gravity anomaly, in an area from which we were not able to obtain seismic reflection profiles.

The extensive bathymetric profiles gathered by the Polar Star during the 1992 and 1993 cruises will be combined with the sparse existing data to produce a

new bathymetric map of the eastern Chukchi Borderland and vicinity. This map is required for the analysis of the marine gravity data, but will also be useful for regional geomorphological and structural analysis of the Amerasia Basin.

Sampling for Possible Radionuclide Contamination of Russian Origin in the Canada Basin Region

Principal Investigators: Edward R. Landa, U.S. Geological Survey, MS-430, National Center, Reston, VA 22092; R.G. Perkin, Institute of Ocean Sciences, 9860 West Saanich Road, Sidney, B.C., Canada V8L 4B2; and Arthur Grantz, U.S. Geological Survey, 345 Middlefield Road, Menlo Park, CA 94025

The 1993 program was designed to determine whether long-lived radionuclides associated with the nuclear fuel cycle, weapons production and testing in northern Russia and along its major north-flowing rivers, and the disposal of solid and liquid radioactive waste in the Kara and Barents Seas by the Former Soviet Union (FSU) have reached the Canada Basin of the North American Arctic. An ancillary program under the direction of Walter Nassichuk of the Geological Survey of Canada will use box core samples collected during cruise P1-93-AR to assess whether anthropogenic contaminants from the FSU or other sources are reaching the Canada Basin.

Samples collected by the program in the Northwind Basin, Northwind Ridge, and western Canada Basin from the Polar Star in 1992 were analyzed for tritium, cesium-137, and iodine-129 by the Water Resources Division of the U.S. Geological Survey, and the Environmental Measurements Laboratory of the U.S. Department of Energy. None of the analyses of the 1992 water showed anomalous levels of contamination.

The program conducted from the Polar Star in 1993 (Table 3) differs from the 1992 program in two respects. The number of radionuclides to be analyzed was broadened to cesium-137, isotopes of plutonium, tritium, iodine-129, and technetium-99, and the sampling was focussed on the three current systems that could bring contaminants from Russian Arctic continental shelves to the Canada Basin and its environs. Two of these systems consist of deep currents, generated by the interaction of large scale eddies and bathymetry, that flow along the slopes of continental margins and highstanding ridges in the Arctic Basin. One of these systems flows easterly along the continental margins of the East Siberian,

Table 3. Water column samples collected over Northwind Ridge, Canada Basin, and Alaskan Beaufort Sea continental slope, western Arctic Ocean during U.S. Geological Survey cruise P1-93-AR for analysis of radionuclides. Samples were collected with a rosette consisting of a CTD and 24 Nisken bottles of 10 l capacity suspended from a conducting cable. At most stations water samples were collected from all major water masses from a few meters above the sea bed to about 6.5 m below the sea surface.

Hydrocast No.	Station No.	Date-1993 GMT	Time	Lat. (N)/Long. (W)	Water Bottom (m)	$^{137}Cs/^{129}I$*	Tritium*	^{99}Tc*
H1	1	Aug. 18	04:50	72° 11.60'/155° 14.43'	760	5	5	--
H2	2	Aug. 18	07:36	72° 11.56'/155° 47.56'	322	5	5	--
H3	3	Aug. 18	11:45	72° 22.83'/155° 17.81'	2,170	9	9	14
H4	4	Aug. 18	23:30	75° 52.40'/155° 97.99'	2,930	1	1	--
H5	15	Aug. 21	22:08	75° 45.47'/157° 52.92'	894	9	9	--
H9	19	Aug. 22	9:20	75° 45.28'/157° 19.90'	2,135	9	9	--
H14	23	Aug. 23	10:42	74° 43.60'/156° 56.20'	3,840	5	5	--
H15	33	Aug. 29	6:52	76° 51.65'/154° 13.66'	1,504	5	5	--
H17	37	Aug. 30	23:50	78° 38.33'/150° 15.54'	3,836	5	5	--
H18	38	Sept. 2	18:25	76° 24.69'/151° 21.54'	3,829	9	9	--
H20	40	Sept. 4	9:40	75° 48.87'/155° 01.80'	3,830	5	5	--
H21	41	Sept. 6	0:55	75° 20.62'/150° 02.44'	3,810	5	5	--
H22	42	Sept. 8	17:00	74° 35.87'/142° 03.31'	3,657	5	5	--
H24	44	Sept. 11	15:55	73° 52.06'/140° 26.68'	3,484	5	5	--
H26	46	Sept. 13	9:15	72° 10.53'/141° 02.87'	2,930	5	12	--
H27	47	Sept. 15	9:16	71° 11.73'/147° 07.90'	2,000	5	13	--

*Numbers in columns indicate number of individual samples collected at specific water depths.
Cs=Cesium I=Iodine Tc=Technetium

Chukchi, and Beaufort Seas; the other flows southerly along the eastern face of Northwind Ridge. Cold, dense waters from the Kara and Barents Seas are able to enter the deep circulation systems by convecting off these continental shelves during the colder months of the year. Chemical and physical tracers, supported by physical models, identify the Canada Basin and Northwind Ridge to be branches of this circulation system, and these areas are therefore candidates for contamination from sources in the FSU. The third current system is the shallow, wind-driven, clockwise Beaufort gyre of the Canada Basin, which incorporates shelf water from many sources (Fig. 1). The gyre was sampled to determine whether it carries contaminated water and sediment in sea ice from the Russian continental shelves and the large, north-flowing Russian river systems that enter the Arctic Basin west of the Kara Sea.

Sediment from the sea bed was collected in 21 box cores obtained with either a full size or 3/4 size Naval Electronics Laboratory "Spade Corer" with either a 20x30x60 cm or 20x30x44 cm box. Of these, four were from beneath the current system that flows east along the continental slope of the Beaufort Sea, five were from beneath the Beaufort gyre, and 12 from beneath the south-flowing current along Northwind Escarpment. These samples complement the extensive radionuclide sampling program conducted during the first leg of the 1993 cruise of the Polar Star by the Office of Naval Research.

P1-93-AR collected a total of 200 water column samples at 16 sites. Of these sites five are from the area of the continental slope current system of the Beaufort Sea, five from the area of the Beaufort gyre, and six from the area of the south-flowing current along the Northwind Escarpment. A preliminary assessment of the status of radionuclide contamination in the Canada Basin and environs will be available upon completion of the planned analyses within about a year.

Seismic Refraction

Principal Investigator: Ruth Jackson, Geological Society of Canada, Atlantic Geoscience Centre, Box 1006, Dartmouth, Nova Scotia B2Y 4A2

The seismic refraction program was planned to complement the seismic reflection survey. Because of its ice cover, the Canada Basin has had little seismic investigation, and there are many unknowns that cannot be solved without this information. In particular, the seismic refraction lines targeted three goals: the thickness of the sedimentary section, which is suspected to be greater than 5 km;

the nature of the crust beneath the sedimentary horizons; and the depth to mantle. This information, in combination with the reflection profiles, should definitely determine the nature of the crust beneath the Canada Basin. The refraction data obtained during P1-93-AR consist of the following lines, which are also shown in Figure 1.

Refraction line 1 (seismic reflection line 93-06)		Length of line, km
OBS launch	78° 47.93' N / 151° 09.24' W	
OBS recovery	78° 49.09' N / 151° 14.23' W	
SOL 0400/243	78° 36.85' N / 150° 13.60' W	28
EOL 0755/243	78° 47.59' N / 151° 04.14' W	

Refraction line 2 (seismic reflection line 93-10)		
OBS L launch	76° 24.25' N / 151° 19.53' W	
recovery	76° 24.43' N / 152° 05.38' W	
OBS I launch	76° 43.10' N / 153° 01.23' W	
recovery	75° 45.18' N / 153° 48.21' W	
SOL 2334/245	76° 26.71' N / 151° 16.64' W	95
EOL 2253/246	75° 43.75' N / 153° 00.37' W	

Refraction line 3 (seismic reflection lines 93-14, 93-15A,and 93-16)		
OBS I and S launch	73° 42.70' N / 140° 54.70' W	
recovery	73° 51.10' N / 140° 45.50' W	
OBS L launch	73° 42.60' N / 143° 34.0' W	
recovery	73° 46.20' N / 143° 28.3' W	
SOL 0434/253 (93-14)	73° 40.48' N / 143° 30.85' W	46
EOL 1332/253 (93-14)	73° 39.63' N / 142° 12.11' W	
SOL 1632/253 (93-15A)	73° 39.17' N / 142° 23.52' W	30
EOL 2000/253 (93-15A)	73° 23.16' N / 142° 23.53' W	
SOL 2354/253 (93-16)	73° 15.76' N / 140° 52.10' W	63
EOL 1004/254 (93-16)	73° 49.46' N / 140° 44.24' W	

Conventional use of Ocean Bottom Seismometers (OBS) is possible, but usually not practical in ice-covered seas because of the difficulties in locating and retreiving instruments that surface under ice floes. Therefore this survey used OBS that were modified to be placed on ice floes, and the seismometers were replaced with hydrophones that were deployed in the water through leads or bore holes to a depth of five meters. This was a first trial for deploying the instruments in this fashion. It was also necessary to suspend and tow three 1,000 cu. in. (16.4 liter) airguns through sea ice concentrations of up to 9/10 from the air gun frame illustrated in Figure 2B. The experiment was successful in that six OBS were launched and recovered and the air gun array did work as a sound source. Several important lessons were learned from this exercise.

Recovery of the OBS was facilitated by the Datum Marker Buoys supplied by the Coast Guard aviation detachment. These buoys are manufactured by the DME Corporation, 111 SW 33rd Street, Fort Lauderdale, FL 33315 Cage #55827. Model RB-101, PING1-09-00001-001, NSN 825-01-HR-1603. Their transmitting frequency is 240.600 MHz. The helicopters carry a Direction Finder DF-301 which can receive the transmitting station on VHF, UHF, and VHF-FM. OBS L and I, which had drifted 20 km from the point of deployment, were found readily because of these buoys. The Datum Marker Buoys were vital to this operation.

The three 1,000 cu. in. airguns were suspended from the frame used to tow six smaller airguns used for seismic reflection work (Fig. 2B). It was difficult to get three guns to work reliably in the sea ice. Shackles, chains, and air hoses were repeatedly replaced. Modifications to the towing system must be considered to increase reliability. One possibility is a slightly larger frame. Another is to tow several large (1,000 or 2,000 cu. in.) air guns separately, without a frame.

The analog seismic refraction data can be previewed at sea but the data are not easily displayed. Digitization and playback will take place in the laboratory. The seismometers all transported tape properly and clock calibrations were successfully completed. The refraction lines were shot during winds of 20 knots and greater accompanied by substantial ice movement. Preview of the data on several of the instruments recorded environmentally induced noise was present. For high signal to noise ratios, care must be taken to run refraction lines of this type when winds are light.

The conditions for successfully completing a refraction line are demanding. Weather conditions suitable for helicopters to fly are essential for deploying, and especially for retrieving, the instruments. Unfortunately, the

number of days when fog does not interfere with flying is not large, and days with little wind and consequent minimal ice drift are scarce.

Climate History of the Western Arctic Ocean

Principal Investigators: R.L. Phillips and Arthur Grantz, U.S. Geological Survey, 345 Middlefield Road, Menlo Park, CA 94025

Documenting the climate history of the western Arctic Ocean from the inception of glaciation to the present time is the purpose of paleoclimate investigations conducted on Northwind Ridge. Understanding glacial-interglacial sedimentation is a special emphasis of this study. For paleoclimate, stratigraphic, and microfossil studies we collected 23 piston cores, ranging from 75 to 818 cm in length, in water depths ranging from 918 m on the crest of Northwind Ridge to 3,644 m on its east flank (Table 1). At least six cores contain a complete stratigraphic sequence from the Holocene into the Pliocene. Three cores contain up to 4 m of Clark and others (1980) oldest lithostratigraphic unit (Unit A) and represent the longest cored sections of this significant unit obtained to date. The expanded sections of Unit A will confirm the initiation of ice rafting and the formation of sea ice cover in this part of the Arctic Ocean. The expand core sections will also aid in determining the origin of the distinctive pre-1 million year old multiple ice-rafted sediment cycles identified in the 1992 cores from Northwind Ridge. Seven piston cores and one box core are also significant for understanding the bedrock stratigraphy of the Northwind Ridge as well as contributing information for climate studies.

The cores show that deep erosive paleocurrents existed along the east flank of Northwind Ridge in the past, as evidenced by erosion or non-deposition of Quaternary sediments. As a result of these currents, bedrock lies less than 30 cm from the sea floor surface in some of the piston cores. The presence of paleocurrents is also demonstrated by the recovery of bedrock rubble in a trigger core and a box core, by "clean" essentially mud-free thick gravel lag deposits within the Quaternary section, and by multiple concentrated gravel lag deposits found in cores below 3,000 m depth. These concentrated gravel deposits show that strong paleocurrents flowed along the east face of Northwind Ridge at least periodically during Quaternary time.

Twenty three box cores were also obtained from the Canada Basin, Northwind Ridge, and the Chukchi Sea and Beaufort Sea continental slopes with

a Naval Electronics Laboratory box corer at water depths ranging from 100m to 3,842 m (Table 2). Dark brown soft Holocene mud forms the sea floor surface and can extend down to more than 10 cm depth. Samples for microfossil occurrence and distribution, organic pollution, and radionuclide pollution were obtained from the surficial sediments in the box cores.

Oceanography of the Canada Basin/Northwind Ridge Region

Principal Investigator: Ron Perkin, Institute of Ocean Sciences, 9860 West Saanich Road, Sidney, B.C., Canada V8L 4B2

This cruise was the first crossing of the Canada Basin of the Arctic Ocean by a major research vessel. Deep oceanographic profiles with complete bottle sets measuring temperature, salinity, nutrients, carbon-14, and fission by-product contaminants were obtained across the entire basin from Northwind Ridge near 76° N to the Mackenzie Delta. The temperature, salinity and depth were recorded with a Sea-Bird Electronics, Inc. Model SBE 911+ CTD profiling and deck recording system supplemented by a Model SBE 19 CTD profiler, and the water samples were obtained with 10 liter Niskin bottles on a General Oceanics 24 bottle rosette seawater sampler.

Coverage was much better than expected due to the unusually felicitous ice conditions allowing greater ship speed and more northerly penetration of the ice pack. Oceanographic profiling proceeded with no problems beyond the initial set-up to correct some problems discovered on the previous leg of the cruise. No bottles were lost or misfired and the CTDs performed flawlessly. A number of casts to the bottom of the Canada Basin, 3,800 m were completed and salinity samples were analyzed on-board.

A total of 29 casts were completed (Table 4). The most northerly station was a cast to 3,800 m off the north tip of the Northwind Ridge, 76° 24.7' N, 151° 21.5' W.

Analysis shows the water on Northwind Ridge to be distinctly different from the usually stable Canada Basin TS (temperature-salinity) characteristic with a less saline Atlantic water temperature max. reaching to .05°C. From Tmax at 500 m to near 1,500 m, the water on identical density surfaces is colder than in the Canada Basin and interleaving features, on approximately 25 m scales, are plentiful in the frontal zone. Below 2,000 m profiles are identical with those in Canada Basin water.

Table 4. Hydrographic casts made by Institute of Ocean Sciences (IOS) over Northwind Canada Basin, and Beaufort Sea continental slope of western Arctic Ocean during U.S. Geological Survey cruise P1-93-AR (IOS Cruise 9350). Primary CTD was a Sea-Bird Electronics Model SBE 911 plus (serial number 09P7975-0302); secondary CTD was a Sea-Bird Electronics Model Sea-Bird Electronics Model SBE 19 (serial number 197975-1934).

Hydrocast No.	Date - 1993 GMT	Time	Start of Cast Lat. (N)/Long. (W)	Time	On Bottom Lat. (N)/Long. (W)	Time	End of Cast Lat. (N)/Long. (W)	Depth (m) (Sounding)	CTD max Press, db
H1	Aug. 18	4:15	72° 11.24'/155° 17.31'	04:50	72° 11.49'/155° 17.51'	5:20	72° 11.60'/155° 17.43'	780	756
H2	Aug. 18	7:30	72° 11.55'/155° 49.55'	07:36	72° 11.53'/155° 49.40'	7:50	72° 11.56'/155° 49.56'	321	315
H3	Aug. 18	11:05	72° 22.83'/155° 15.38'	11:45	72° 22.92'/155° 16.71'	12:40	72° 22.83'/155° 17.81'	2,170	2,131
H4	Aug. 18	22:35	72° 52.12'/155° 52.46'	23:30	72° 52.52'/155° 53.62'	0:38	72° 52.79'/155° 55.19'	2,895	2,947
H5	Aug. 21	21:16	74° 45.41'/157° 52.70'	22:08	74° 45.47'/157° 52.92'	22:46	74° 45.44'/157° 53.11'	896	885
H6	Aug. 22	1:05	74° 44.70'/157° 27.57'	1:36	74° 44.55'/157° 27.70'	1:59	----------	1,536	1,476
H7	Aug. 22	2:49	74° 44.55'/157° 23.42'	3:18	74° 44.40'/157° 23.51'	3:49	----------	1,779	------
H8	Aug. 22	4:30	74° 44.48'/157° 21.36'	5:07	74° 44.44'/157° 21.71'	5:40	----------	1,942	------
H9	Aug. 22	8:40	74° 44.67'/157° 19.14'	9:20	74° 45.24'/157° 20.43'	10:18	74° 45.52'/157° 22.16'	2,035	2,143.7
H10	Aug. 22	13:40	74° 44.37'/157° 14.22'	14:41	74° 44.42'/157° 13:73'	15:32	----------	2,476	------
H11	Aug. 22	17:09	74° 43.95'/157° 16.49'	17:57	74° 43.97'/157° 17.10'	18:54	----------	2,560	------
H12	Aug. 22	19:55	74° 44.15'/157° 11,79'	21:00	74° 44.40'/157° 12.54'	21:49	74° 44.31'/157° 12.38'	3,120	------
H13	Aug. 23	1:30	74° 44.05'/157° 09.83'	2:33	74° 44.19'/157° 09.46'	3:26	----------	3,482	------
H14	Aug. 23	9:31	74° 43.71'/156° 59.52'	10:42	74° 43.76'/157° 00.89'	12:27	74° 43.76'/157° 01.29'	3,821	3,912.7
H15	Aug. 29	6:17	76° 51.71'/154° 13.27'	6:52	76° 51.65'/154° 13.66'	7:35	76° 51.64'/154° 13.74'	1,476	1,494.8
H16	Aug. 29	23:39	77° 45.12'/153° 59.74'	0:16	77° 45.25'/154° 00.43'	0:52	77° 45.35'/154° 00.87'	1,910	1,928
H17	Aug. 30	22:40	78° 38.28'/150° 15.56'	23:50	78° 38.33'/150° 15.57'	1:10	78° 38.37'/150° 15.71'	3,804	3,886
H18	Sept. 2	17:20	76° 24.42'/151° 20.30'	18:25	76° 27.69'/151° 21.48'	20:07	76° 24.73'/151° 23.07'	3,806	3,898.6
H19	Sept. 4	0:35	75° 42.14'/153° 11.15'	0:55	75° 42.11'/153° 12.38'	1:20	75° 42.08'/153° 13.33'	3,818	1,201.6
H20	Sept. 4	8:35	75° 48.89'/155° 00.04'	9:40	75° 48.87'/155° 01.83'	10:50	75° 48.82'/155° 04.03'	3,830	3,908
H21	Sept. 6	23:50	75° 20.52'/150° 01.55'	0:55	75° 20.62'/150° 02.44'	2:13	75° 20.68'/150° 03.69'	3,810	3,895
H22	Sept. 8	16:00	74° 35.98'/142° 02.08'	17:00	74° 35.87'/142° 03.31'	18:25	74° 35.88'/142° 04.67'	3,657	3,747
H23	Sept. 10	20:50	73° 21.50'/142° 22.32'	21:00	73° 21.44'/142° 22.29'	21:06	73° 21.40'/142° 22.24'	3,529	300
H24	Sept. 11	14:50	73° 52.22'/140° 29.78'	15:55	73° 52.06'/140° 26.68'	17:18	73° 51.71'/140° 23.38'	3,482	3558.9
H25	Sept. 12	21:15	72° 56.11'/140° 41.46'	21:30	72° 56.06'/140° 41.59'	21:45	72° 56.06'/140° 41.68'	3,268	628.7
H26	Sept. 13	8:30	72° 11.00'/141° 01.71'	9:15	72° 10.53'/141° 02.87'	10:30	72° 09.76'/141° 04.97'	2,937	2,982.4
H27	Sept. 15	8:40	71° 10.99'/147° 06.28'	9:16	71° 11.72'/147° 07.90'	10:16	71° 12.85'/147° 09.72'	2,000	1,982
H28	Sept. 15	18:45		19:44	71° 03.43'/147° 14.85'	----	----------	1,046.7	------
H29	Sept. 15	22:36		22:51	71° 00.89'/147° 21.96'	----	----------	401	------

The source of the Northwind Ridge water is yet to be determined and a considerable body of data will be available from the ARCRADS program as well as the concomitant NOGAP cruise. It is interesting to note that the upper deep water segment is identical to water found off the Alpha Ridge but that the (less saline) upper temperature maximum is likely a new arrival from the Eurasian Basin. This result is in rough agreement with the 1992 data set although there are some differences.

To the west, over Northwind Ridge, some evidence suggests water younger than Canada Basin water to approximately 1,500 m. More will be known about that when the ^{14}C samples are analyzed. Northwind Ridge water with its double Tmax feature, can be found along the Alaska shelf as far east as Point Barrow, and perhaps beyond. This scenario is in agreement with a circulation model incorporating driving forces from eddy-topography interaction and may be confirmed by a Bernoulli Method analysis yet to be done.

If this combination of supposed circulation and TS contrasts persists beyond the previous two years, it would imply an unexpected shift in the properties of Atlantic water in the Canada Basin to lower salinity. It will be necessary to examine previous, especially Russian, data to determine whether present conditions fall within the "normal" range.

Open water and the passage of warm lows through the southern Beaufort Sea have made for unusual conditions in the upper ocean. Temperatures in the neighborhood of +1°C in wind mixed layers to 10 to 15 m, and relatively high air temperatures, have discouraged the onset of ice formation into mid-September. Evidence of strong internal wave activity on the halocline to a depth of 80 m has shown up on the CTD profiles and appears to have resulted in some erosion of the temperature maximum usually found near that level. If this wind-mixed layer becomes submerged by the returning pack ice, the resulting heat flux into the ice will be equivalent to approximately 28 cm of ice melt.

Sea Ice Physics

Principal Investigators: Shusun Li, Carl Byers, and Kenneth R. Schwartz, Geophysical Institute, University of Alaska, Fairbanks, AK 99775

The purpose of our participation in P1-AR-93 was to collect data on the physical properties of sea ice to ground truth Synthetic Aperture Radar (SAR) imagery generated by the European Radar Satellite (ERS-1) and the Japanese

Earth Resources Satellite (JERS-1). These polar orbiting satellites are particularly effective at imaging sea ice, a material which is receiving intense study because of its relevance to global warming and climate change.

SAR images are formed from the variation in backscatter of the microwave radiation generated by these satellites. A number of parameters affect the backscatter from sea ice: surface roughness, salinity, brine volume, the presence of liquid water, and the dielectric properties of the ice. These parameters are anisotropic, time dependent, and not independent of each other. Interpretation of images acquired during the summer melt season and the initial freeze-up in fall has been particularly difficult because of the changing salinity of existing sea ice and the appearance of new ice types from both fresh and saline sources.

Data gathered during the cruise include temperature and salinity of sea ice and melt ponds, where present; snow cover depth and grain size; ice surface roughness; ice crystal morphology; ice stratigraphy; oxygen isotope ratios (for ice provenance); and areal distribution of ice and ice concentration.

Ice samples were taken from 25 stations on floes of various thicknesses and ages during P1-93-AR (Table 5). Salinity and temperature were measured at the surface, at depths of five and ten cm, and at ten cm increments for the entire remaining thickness of each floe that was cored. Approximately 50 m of cores were retained forstudy of the crystallography and stratigraphy in the laboratory. Samples of snow, sea water, and melt water (when available) were taken at all sample sites. Two of the stations were occupied during ERS-1 overpasses. One station combined an ERS-1 pass, visual observations by helicopter, and samples from a large multi-year floe. At one station a disposable corner reflector was also deployed. The reflector will allow us to identify and track the floe by satellite, and thereby to observe changes in the ice surface in SAR images for several months.

It is expected that the data will contribute significantly to the reliable interpretation of SAR imagery.

Sediment in Sea Ice

Principal Investigators: Michael McCormick (cruise participant), Peter W. Barnes, and Erk Reimnitz, U.S. Geological Survey, 345 Middlefield Road, Menlo Park, CA 94025

Sedimentary material may be incorporated into sea ice during freezing events in shallow, open water areas of Arctic shelves during times of high wind.

Table 5. Sea ice cores collected for measurement of physical properties in the Northwind Ridge and Canada Basin areas of the western Arctic Ocean by the Geophysical Institute, University of Alaska-Fairbanks, during U.S. Geological Survey cruise P1-93-AR.

Core No.	Station No.	Date - 1993	Time	Lat. (N)/Long. (W)	Air Temp. (°C)	Ocean Temp. (C)	Ice Thickness (m)
B'fort 1	1	Aug. 18	09:37	72° 52.87'/155° 45.21'	0.2	----	2.96
B'fort 2	2	Aug. 20	15:15	74° 48.13'/157° 09.29'	0.5	----	›1.0 (sta. aborted)
B'fort 3	3	Aug. 21	11:45	74° 42.80'/157° 58.25'	-1.1	-1.3	2.47
B'fort 4	4	Aug. 22	09:35	74° 44.10'/157° 16.70'	0.4	----	2.04
B'fort 5	5	Aug. 22	18:12	74° 44.13'/157° 09.62'	0.2	----	1.09
B'fort 6	6	Aug. 22	18:38	74° 44.22'/157° 09.30'	0.2	----	1.8
B'fort 7	7	Aug. 23	14:00	74° 49.31'/156° 46.51'	1.8	----	›1.17 (lost tube)
B'fort 8	8	Aug. 25	13:07	74° 24.49'/159° 39.03'	1.2	-1.1	2.04
B'fort 9	9	Aug. 25	14:00	74° 24.37'/159° 39.75'	0.5	-1.1	3.22
B'fort 10	10	Aug. 28	20:00	76° 51.86'/154° 12.38'	3	-1.4	1.37
B'fort 11	11	Aug. 28	21:00	76° 51.86'/154° 12.38'	3	-1.4	1.84
B'fort 12	12	Aug. 29	15:45	76° 51.85'/154° 12.36'	4.2	----	1.03
B'fort 13	13	Aug. 30	14:30	78° 38.30'/153° 15.04'	-1.2	----	3.14
B'fort 14	14	Sept. 1	14:40	76° 44.90'/152° 41.30'	-1.8	----	1
B'fort 15	15	Sept. 2	09:12	76° 24.41'/151° 20.23'	-1.1	----	4
B'fort 16	16	Sept. 3	16:38	75° 42.17'/153° 11.29'	-1.5	----	2.25
B'fort 17	17	Sept. 4	12:51	75° 48.96'/155° 00.18'	-1	-1.4	2.83
B'fort 18	18	Sept. 4	23:12	75° 56.64'/158° 43.94'	-2	-1.6	2.1
B'fort 19	19	Sept. 6	13:03	75° 20.19'/149° 59.46'	-4.5	-1.4	3.61
B'fort 20	20	Sept. 6	14:30	75° 20.19'/149° 59.46'	-4.5	-1.4	0.06 (melt pond)
B'fort 21	21	Sept. 8	11:00	74° 35.91'/142° 04.85'	-1.2	-0.3	1.7
B'fort 22	22	Sept. 8	11:30	74° 35.91'/142° 04.85'	-1.2	-0.3	0.12 (melt pond)
B'fort 23	23	Sept. 9	18:10	73° 41.36'/143° 34.69'	-1.5	-1.2	2.79
B'fort 24	24	Sept. 9	19:00	73° 41.36'/143° 34.69'	-1.5	-1.2	0.13 (melt pond)
B'fort 25	25	Sept. 11	08:45	73° 51.93'/140° 24.24'	-1.1	-1.4	›1.33 (core stuck)

During severe storms, when the wind velocity is sufficiently high to affect the sea floor, anchor ice may form on the sea floor. With abatement of these storms anchor ice rises to the surface, along with any sediment that it has entrained. In the case of anchor ice, this can include sand, pebbles, living organisms, and organic remains. Investigations of satellite images and personal observations have noted that the formation of this "dirty ice" is not an annual event but occurs only during unusual environmental conditions on Arctic shelves. The presence of sediment in Arctic sea ice has important implications for a number of Arctic environmental processes. These include: 1) the identification of paleoclimates in the geologic record through identification of sea-ice-transported sediments in sub-sea cores; 2) the effect of sediment in the ice canopy on the albedo, and therefore on melting rates of the ice canopy; and 3) the removal of sedimentary material from Arctic continental shelves. The data base through which these processes may be studied is quite limited, however, and the data gathered during P1-93-AR will be especially useful for understanding them.

Sea ice was sampled for sediment content at 22 stations during P1-93-AR (Table 6). The samples include 39 ice cores and 11 bulk samples. The cores were melted and filtered through a fine membrane to determine sediment concentrations (mg/L) in the sea ice and to delineate source areas. Where sediment was sufficiently concentrated, bulk samples were taken for analysis of textural characteristics, mineralogy, and organisms. Analysis of the bulk samples will include grain size, organic carbon, inorganic carbon, and carbonate. The results will be interpreted to provide bathymetric and geographic ranges or provenance of the sediment. Other samples included ice scooped out of the ocean using a dip net, snow samples, water samples, and the water slurry from the top of box cores. Sea water was sampled to determine the composition of sediment released from the ice during icebreaking, while the box core slurries are used to compare the sediment in the sea ice with that at the sea floor. Sampling was combined with under way ice observations of surface cover, ice type and relative sediment content, and was used to compare sea ice conditions geographically and with conditions observed in prior years.

Aerial ice observations showed an extensive band of dirty first-year (FY) ice north of Point Barrow that contained sand, pebbles, and clams of shallow water origin. Farther north young multi-year (MY) floes, with substantial amounts of sediment on the surface and in accretionary pellets within the ice floe were commonly interspersed with clean MY floes. It wasn't until we headed southeast

Table 6. Sea ice and snow bulk samples and cores taken from sediment-in-sea ice studies from the Northwind Ridge and Canada Basin areas of the western Arctic Ocean by the U.S. Geological Survey during cruise P1-93-AR.

Station No.	Date - 1993 GMT	Time	Lat. (N)/Long. (W)	Bulk Sample	Ice Core	Other (snow, ice)
229-1	Aug. 17	16:30	71° 50.24'/155° 13.46'	--	--	1 ice
230-1	Aug. 18	10:30	72° 52.73'/155° 46.15'	1	2	-----
232-1	Aug. 20	15:30	74° 48.08'/157° 09.46'	1	--	1 snow
233-1	Aug. 21	11:30	74° 42.69'/157° 58.61'	1	2	-----
234-1	Aug. 22	09:30	74° 44.46'/157° 13.47'	--	3	-----
234-2	Aug. 22	09:40	74° 44.59'/157° 13.47'	1	--	-----
235-1	Aug. 23	14:00	74° 50.69'/156° 47.89'	1	2	-----
236-1	Aug. 24	10:00	74° 49.40'/156° 44.58'	1	2	-----
237-1	Aug. 25	14:00	74° 24.27'/159° 39.54'	1	2	-----
240-1	Aug. 28	20:00	76° 51.80'/154° 12.86'	1	3	-----
241-1	Aug. 29	16:00	77° 44.02'/153° 58.37'	1	3	-----
242-1	Aug. 30	16:30	79° 27.42'/150° 22.27'	1	2	-----
245-1	Sept. 2	09:00	76° 24.40'/151° 20.18'	--	2	-----
246-1	Sept. 3	16:00	75° 42.26'/153° 09.87'	--	2	1 snow
247-1	Sept. 4	09:30	75° 49.14'/155° 00.27'	1	4	-----
247-2	Sept. 4	23:00	75° 56.39'/158° 44.76'	--	2	-----
249-1	Sept. 6	15:00	75° 20.62'/150° 02.44'	--	2	-----
251-1	Sept. 8	11:00	75° 35.92'/142° 05.07'	--	1	-----
251-2	Sept. 8	12:15	75° 21.00'/140° 31.10'	--	2	-----
252-1	Sept. 9	18:00	73° 41.42'/143° 34.64'	--	2	-----
254-1	Sept. 11	06:50	73° 53.21'/140° 29.67'	--	--	1 snow
254-2	Sept. 11	09:30	73° 51.33'/140° 22.47'	--	1	-----

that we got into heavy MY ice usually seen in the Beaufort Sea. In the southeastern Canada Basin we encountered sparse small, dense MY floes devoid of sediment.

In comparison to conditions in 1992, a substantial amount of sediment was seen in the ice of the Beaufort Gyre in 1993. The large amount of sediment in FY ice indicates a severe freeze up in the Fall of 1992 that entrained substantial amounts of coarse material from the shallow areas of the Beaufort shelf. The common occurrence of sediment in younger MY floes is probably the same dirty ice that was seen as dirty FY ice near Point Barrow in the Fall of 1992. The small MY floes encountered in the southeastern Canada Basin were so dense, clean, and weathered that they might be the remains of old floes that have circuited the entire Beaufort Gyre. The prevalent occurrence of sediment in accretionary pellets within the ice floes indicates that substantial amounts of sediment may exist in the ice canopy than can be observed from aerial observations. Upon melting such ice may eventually contribute large amounts of sediment to the Arctic Ocean Basins.

Throughout the 1993 cruise, a significant amount of brown leafy algae was seen growing on the underside of the sea ice which differed from the filamentous alga that was abundant in the sea ice in 1992. Very little of the filamentous was seen in 1993.

Paleoclimate and Paleooceanography of the Amerasia Basin from AMS ^{14}C Dating

Principal Investigators: Dr. Glenn Jones and Alan Gagnon (cruise participant) of the Woods Hole Oceanographic Institution, Woods Hole, MA 02543

Arctic Holocene and late Pleistocene sediments were collected from box cores along a transect between the crest of Northwind Ridge and the southeastern Canada Basin in order to reconstruct oceanographic and environmental conditions during the last 50,000 years of Earth history. Deep ocean water column samples and CTD profiles were also collected along the same transect to gain a better understanding of the thermohaline circulation in the Canada Basin.

Our primary focus is the reconstruction of spatial and temporal trends in the $\delta^{18}O$ of surface waters from analyses conducted on monospecific species of planktonic foraminifers found in 21 box cores collected from Northwind Ridge, Canada Basin, and the continental slope of the Beaufort Sea (Table 2). These

analyses will include $\delta^{18}O$ and $\delta^{13}C$ measurements using a stable isotope ratio mass spectrometer. We also hope to reconstruct Holocene glacial patterns by measuring sedimentation rates using AMS ^{14}C dating techniques. These analyses will be performed at the National Ocean Sciences Accelerator Mass Spectrometry Facility (NOSAMS) located at the Woods Hole Oceanographic Institution. Standard sedimentological analyses (i.e., grain size, % carbonate, CHN) will also be conducted, along with the identification and quantification of foraminifer species. Water samples will be analyzed for total dissolved inorganic carbon (ΣCO_2), $\delta^{18}O$, and $\Delta^{14}C$ concentration (Table 7). We hope to analyze these data in tandem with results obtained from water nutrients, dissolved oxygen, and CTD interpretations conducted by cruise participants from the Institute of Ocean Sciences, B.C., Canada. The 1993 samples should complement data sets collected during cruises to the Amerasia Basin in 1988, 1989, and 1992. Special equipment utilized to achieve our scientific goals include:

a. At sea: Full sized or 3/4 size Naval Electronics Laboratory Box "Spade Corers" with either a 20x30x60 or a 20x30x44 cm boxes, General Oceanics 24 bottle rosette seawater sampler with a Sea-Bird Electronics Model SBE-911+ CTD profiling and deck recording system and a Sea-Bird Seacat Model SBE-19 CTD profiler.

b. In the laboratory: Tandem Accelerator Mass Spectrometer (NOSAMS) and a stable isotope ratio mass spectrometer (V.G. PRISM). Automated systems will be used to remove dissolved inorganic carbon from the seawater and to convert the CO_2 to graphite.

We successfully sampled six water column profiles (16 sample intervals per cast) across the Canada Basin and have recovered a well-preserved sediment-water interface in 21 box cores. Unfortunately, we must await analyses of sediments and water samples in the lab before even preliminary evaluations can be made. Abundant planktonic foraminifers were apparent in the tops of almost all of the box cores taken. After numerous attempts, we also successfully obtained a box core (number 12, Table 2) from the deepest part of the Canada Basin at the foot of the Northwind Escarpment. This core will help fill a gap from analysis of depth transects along the Northwind Ridge taken in 1988 and 1992.

Table 7. Water column samples collected for dissolved inorganic carbon, $\Delta^{14}C$, and $\delta^{18}O$ analysis from Northwind Escarpment and Canada Basin areas, western Arctic Ocean by Woods Hole Oceanographic Institution during U.S. Geological Survey cruise P1-93-AR.

Hydrocast No.	Station No.	Date - 1993 GMT	Time	Lat. (N)/Long. (W)	Water Bottom (m)	Number of Samples for ^{14}C Analysis
H14	23	Aug. 23	10:42	74° 43.80'/156° 59.40'	3,821	16
H17	37	Aug. 30	23:50	78° 38.40'/150° 15.60'	3,804	16
H21	41	Sept. 6	0:55	75° 20.40'/150° 01.80'	3,810	16
H22	42	Sept. 8	17:00	74° 36.00'/142° 02.40'	3,657	16
H24	44	Sept. 11	15:55	73° 52.20'/140° 30.00'	3,482	15
H26	46	Sept. 13	9:15	72° 10.80'/141° 01.80'	2,937	16

OTHER INVESTIGATORS

In addition to the primary investigations described above, samples will be furnished to the following investigators for the purposes indicated. All splits of box cores are of the topmost 2 cm, and include the sediment/water column interface.

Donna Beals and co-workers, Environmental Technology Section, Westinghouse Savannah River Company, Aiken, South Carolina

Water samples for analysis of ^{99}technetium and ^{137}cesium in water column. Splits of box cores for analysis of ^{137}cesium and ^{99}technetium in sea floor sediment.

Thomas L. Beasley, Environmental Measurements Laboratory, Department of Energy, New York, New York

Splits of box cores for analyses of $^{239, 240, 241, \text{and } 242}$plutonium in sea floor sediment. Water samples for analysis of ^{137} cesium, ^{129} iodine, and ^{99}technetium in water column.

Jens Bischof, Old Dominion University, Norfolk, Virginia

Sediment in sea ice to determine provenance of sand-size and coarser clasts.

William Briggs, University of Colorado, Boulder, CO

Splits of box cores for depth range and ecology of ostracodes.

Elisabeth M. Brouwers, U.S. Geological Survey, Denver, Colorado

Examination of sediment from sea ice for ostracodes.

Eddy Carmack, Canadian Institute of Ocean Sciences, Sidney, British Columbia

Physical oceanographic data to integrate with similar data gathered elsewhere in the Amerasia Basin from the R/V Henry Larsen and other Canadian research vessels.

Norman Cherkis, U.S. Naval Research Laboratory, Washington, D.C.

Bathymetric data

David L. Clark, University of Wisconsin, Madison, Wisconsin

Examination of conodonts from late Paleozoic limestones in piston cores from Northwind Escarpment.

William B. Curry and David A. Schneider, Woods Hole Oceanographic Institution, Woods Hole, Massachusetts

Splits of piston cores to measure stable isotopes of oxygen and carbon.

Dennis Darby, Old Dominion University, Norfolk, Virginia

Sediment from sea ice for clay mineral analysis.

Scott E. Ishman, U.S. Geological Survey, Reston, Virginia

Splits of box and piston core samples to determine age, depth range, and ecology of late Cenozoic benthic foraminifers.

Robert L. Michel, U.S. Geological Survey, Reston, Virginia

Water column samples for analysis of tritium.

Kristin McDougall and Paula J. Quinterno, U.S. Geological Survey, Menlo Park, California

Examination of sediment from sea ice for foraminifers.

David McNeil, Geological Survey of Canada, Calgary, Alberta

Splits of piston cores to determine age and ecology of late Cenozoic foraminifers.

Peta Mudie, Geological Survey of Canada, Dartmouth, Nova Scotia

Splits of box core samples for palynomorphs.

Michael W. Mullen, U.S. Geological Survey, Menlo Park, California

Examination of pre-Quaternary foraminifers from bedrock cores on Northwind Escarpment.

Bathymetric data for construction of a bathymetric map of Northwind Ridge and western Canada Basin.

Bonita L. Murchie, U.S. Geological Survey, Menlo Park, California

Examination of sponge spicules from late Paleozoic limestones from Northwind Escarpment

Walter Nassichuk, Geological Survey of Canada, Calgary, Alberta

Splits of box core samples to determine the presence and distribution of possible anthropogenic pollutants.

Richard Z. Poore and Kevin Foley, U.S. Geological Survey,Reston, Virginia

Splits of box and piston core samples for age, depth range, and ecology of late Cenozoic microfossils.

June Ross, Western Washington State University, Bellingham, Washington

Examination of bryozoa in late Paleozoic limestones from Northwind Escarpment

David A. Schneider, Woods Hole Oceanographic Institution, Woods Hole, Massachusetts

Piston core samples for paleomagnetic reversal stratigraphy of late Cenozoic strata from Northwind Ridge.

Calvin H. Stevens, San Jose State University, San Jose, California
Examination of fusulinids in late Paleozoic limestones in piston cores from Northwind Escarpment.

Melinda Tucker, University of Southwestern Louisiana, Lafayette, Louisiana
Splits of box and piston core samples to determine age and ecology of late Cenozoic microfossils.

Debra A. Willard, U.S. Geological Survey, Reston, Virginia
Splits of box and piston core samples to determine age of late Cenozoic palynomorphs.

Bruce L. Wardlaw, U.S. Geological Survey, Reston, Virginia
Examination of brachiopods from late Paleozoic limestones in piston cores from Northwind Escarpment.

MEMBERS OF THE SCIENTIFIC PARTY

U.S. Geological Survey, 345 Middlefield Road, Menlo Park, CA 94025

Arthur Grantz
Jonathan R. Childs
David A. Dinter
Leda Beth Gray
Patrick E. Hart
John Lull
Michael McCormick
Mark W. McLaughlin
Michael W. Mullen
James K. O'Toole
Robert L. Phillips
William C. Robinson
David W. Scholl
James R. Vaughan
Harold D. Williams

Geological Survey of Canada, P.O. Box 1006, Dartmouth, Nova Scotia, B2Y 4A2

H. Ruth Jackson
Donald Locke
Jesse Neilsen

Canadian Institute of Ocean Sciences, 9860 West Saanich Road, Sidney, British Columbia, V8L 4B2

Ron G. Perkin
Kent Berger-North

Geophysical Institute, University of Alaska, Fairbanks, Alaska 99775-0800

Carl Byers
Shusun Li
Kenneth R. Schwartz

Woods Hole Oceanographic Institution, Woods Hole, MA 02543

Alan R. Gagnon

REFERENCES CITED

Clark, D.L, Whitman, R.R., Morgan, K.A., and Mackey, S.D., 1980, Stratigraphy and glacial-marine sediments of the Amerasia Basin, central Arctic Ocean: Bulletin of the Geological Society of America Special Paper 181, 57 p.

Grantz, A., May, S.D., Taylor, P.T., and Lawver, L.A., 1990. Canada Basin *in* Grantz, A., Johnson, G.L., and Sweeney, J.F., eds., The Arctic Ocean Region: Boulder, Colorado, Geological Society of America, The Geology of North America, v. L, p. 379-402.

Grantz, A., Mullen, M.W., Phillips, R.L., and Hart, P.E., 1992, Significance of extension, convergence, and transform faulting in the Chukchi Borderland for the Cenozoic tectonic development of the Arctic Basin (abs), Geological Association of Canada, Mineralogical Association of Canada Joint Annual Meeting, Wolfville, Nova Scotia, Canada, 1992, Abstracts Volume 17: Geoscience Canada and Canadian Mineralogist Supplement, p. A42.

1992 Arctic Summer West Scientific Party (A. Grantz, Senior Scientist), 1993, Cruise to the Chukchi Borderland, Arctic Ocean: EOS, Transactions, American Geophysical Union, v. 74, p. 249, 249, 253-4.

Thorndike, A.S., 1986, Kimematics of sea ice, *in* The geophysics of sea ice, NATO Advanced Studies Institute Series B: New York, Plenum Press, p. 146.